Quelle Technischer Kundendienst 065.219.8

SCHALTPLÄNE
und
PLATINEN

UNIVERSUM
Camcorder
VKR 2302

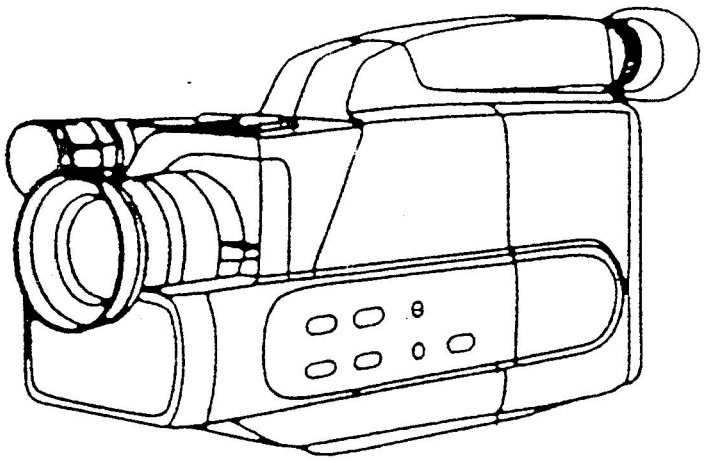

HQ VHS C PAL

.700-451/1184

Großversandhaus Quelle, Gustav Schickedanz KG.
Kundendienstzentralleitung Ulmenstraße 52 **Nürnberg**

Nachdruck nicht gestattet
Änderungen vorbehalten

902 02.90

Bei allen Reparaturen sind die gültigen Sicherheitsvorschriften zu beachten!

LEAD IDENTIFICATION

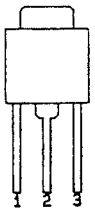

2SA1385
1=BASE
2=COLLECTOR
3=EMITTER

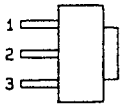

S-81250HG
RH5RA52AA
1=GND
2=VIN
3=VOUT

S80727ANDG
RH5VA27AA
RH5VA45AA
1=OUT
2=VDD
3=VSS

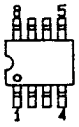

μPC1513G
μPC3586G
MSM6965-3MS-K

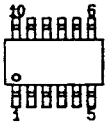

TA8409F

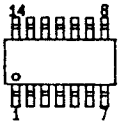

BU4066BF
MN4066BF
NJM4066BF
NJM2902M
μPC3246G2

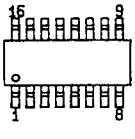

AN2010S
MN3820S
MN4053BS
NJU4053BM
BU4053BF
μPC1100G

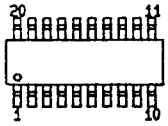

MN3745FS
μPD6147G
μPD6145G

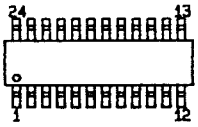

BA6450F
BA5114F
LA7330

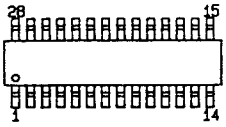

AN2150S
AN2450S
AN2250S
AN2350S

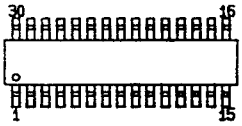

LA7326

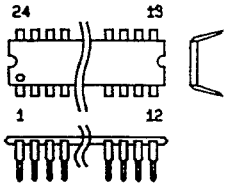

BA6436P

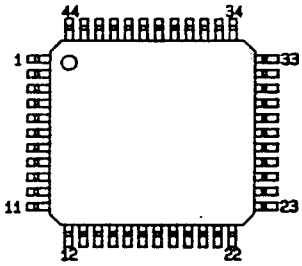

MN53015XBR
MN674711
MN67621F

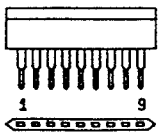

TA7291S

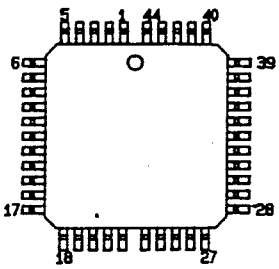

HA11876MP

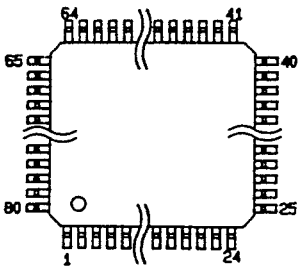

μPD75512GF

CHIP IDENTIFICATION (1/2)

No.	IDENTIFICATION	DISCRIPTION
2SA 1531	F 1.25*2.0	
2SA 1576	FB 1.25*2.0	
2SA 1577	HD 1.25*2.0	
2SC 3929	S 1.25*2.0	
2SC 4081	BB 1.25*2.0	
DA 115	AU 1.25*2.0	2 NC
DA 204U	K 1.25*2.0	
DTA 144EU	16 1.25*2.0	47k 47k
DTC 144EU	26 1.25*2.0	47k 47k
2SA 1462	Y34 1.6*2.9	
2SC 3735	B34 1.6*2.9	

No.	IDENTIFICATION	DISCRIPTION
2SK 621	30 1.5*2.9	
MA 3**** RD OR *.*M	**** 1.5*2.9	1 NC **** ⇒ RANK VOLTAGE
MA 160	MID 1.5*2.9	
FMC1	C1 1.6*2.9	47k 47k
FMG*	G* 1.6*2.9	
2SD 1766	DB 2.5*4.5	
SB20-03PU	SC 2.5*4.5	
TC 4S11F	C1 1.6*2.9	1=Vss 4=Vdd
TC 4S81F	C2 1.6*2.9	1=Vss 4=Vdd
TC 4S69F	C5	1=NC 3=Vss 5=Vdd
DTA 124EU	15	22k 22k

CHIP IDENTIFICATION (2/2)

No.	IDENTIFICATION	DISCRIPTION
MA 141K	1 2 3	1 2 NC 3
2SK94	2 1 3 *=1, 2, 3	2 3 1
DAP 202U	2 1 3 1.25*2.0	2 3 1
2SK 303	2 3 1 *=2.3, 4.5	1 3 2
2SC 4098	2 1 3 *=P, Q, N	2 3 1
DAN 202U	2 1 3	2 3 1
DTC 124EU	2 1 3	2 22k 22k 3 1
MA704	2 1 3	2 1 NC 3
SB007-Q3P	2 3 1	2 3 NC 1
TC 7S00F	1 2 3 5 4 1.6*2.9	1 2 3 Vss VDD 5 4
TC 7S08F	1 2 3 5 4	1 2 3 Vss VDD 5 4

No.	IDENTIFICATION	DISCRIPTION
2SB 709	2 1 3 *=Q, R, S	2 3 1

14DN774 (Syscon IC)

Pin No	IN/OUT	Signal name	Function
1	IN	B-CHK	Battery Check
2	IN	AD-REF	Reference Voltage Add IN
3	IN	V_{DD}	V_{DD} (+5V)
4	IN	V_{DD}	V_{DD} (+5V)
5	OUT	REF	Reference Voltage
6	—	———	———————
7	OUT	P-OFF	Power OFF at "H"
8	OUT	P-ON	Power ON at "H"
9	OUT	ML-FWD	Loading Motor Foward at "H"
10	OUT	ML-RVS	Loading Motor Reverse at "H"
11	OUT	ML-CTL	Loading Motor Control
12	OUT	S-PLAY	Special Play
13	OUT	A-MUTE	Audio Mute at "H"
14	OUT	V-MUTE	Video Mute at "H"
15	OUT	REC	Rec at "L"
16	OUT	PB	Playback at "L"
17	IN	GND	GND
18	IN	GND	GND
19	IN	B-SELECT	Back up Battery at "L"
20	OUT	FADE	Fade on at "L"
21	—	———	———————
22	—	———	———————
23	IN	EJECT	EJECT at "L"
24	IN	P-ON/OFF	Power ON/OFF at "L"
25	IN	DATA 3	Key Scan Data 3
26	IN	DATA 2	Key Scan Data 2
27	IN	DATA 1	Key Scan Data 1
28	IN	DATA 0	Key Scan Data 0
29	OUT	SCAN 3	Key Scan Pulse 3
30	OUT	SCAN 2	Key Scan Pulse 2
31	OUT	SCAN 1	Key Scan Pulse 1
32	OUT	SCAN 0	Key Scan Pulse 0
33	IN	GND	GND
34	OUT	POWER LED	Power LED on at "L"
35	OUT	TALLY LED	Tally LED on at "L"

Pin No	IN/OUT	Signal name	Function
36	OUT	CM-RVS	Capstan Motor Reverse at "H"
37	OUT	CM-FWD	Capstan Motor Foward at "H"
38	—	———	———————
39	—	———	———————
40	OUT	S-DAT	Serial Data
41	OUT	S-CLK	Serial Clock
42	OUT	TEST	Clock Test Port
43	OUT	D-ON	Drum Motor on at "H"
44	OUT	CG-STB	Caractor Generator Data Control
45	—	———	———————
46	IN	C-FG	Capstan FG Pulse
47	IN	LP-H	LP at "H"
48	IN	REC SAFE	Rec Safety Switch on at "L"
49	IN	1/1000	1/1000 Shatter on at "L"
50	IN	GND	GND
51	OUT	CG-DATAA	Caractor Generator Data
52	OUT	CG-CLK	Caractor Generator Clock
53	IN	HSW25	Head Switch Pulse
54	IN	GND	GND
55	IN	XT1	Sub System Clock
56	IN	XT2	Sub System Clock
57	IN	GND	GND
58	IN	X1	System Clock
59	IN	X2	System Clock
60	IN	RESET	Reset at "L"
61	IN	VTR/CAM	VTR Mode at "H", Camera Mode at "L"
62	IN	START/STOP	START-STOP Control at "L"
63	IN	DATE-ON-OFF	DATE-ON-OFF Control at "L"
64	IN	DADE-ON-OFF	Fade-ON-OFF Control at "L"
65	IN	S-REEL	Supply Reel Sensor Pulse
66	IN	T-REEL	Take up Reel Sensor Pulse
67	IN	MD-2	Mode Switch Detector 2
68	IN	MD-1	Mode Switch Detector 1
69	OUT	CASS LED	Cassette LED on at "L"
70	OUT	E-LED	End Sensor LED on at "L"

Pin No	IN/OUT	Signal name	Function
71	OUT	C-PULSE	Capstan Pulse
72	—	———	———————
73	IN	GND	
74	IN	GND	
75	IN	GND	
76	IN	GND	
77	IN	L.L.A	Low Light Alarm Control on at "H"
78	IN	CASS SENS	Cassette sensor on at "H"
79	IN	E-SENS	End Sensor on at "L"
80	IN	DEW.	Dew Sensor on at "L"

14DN768 (Servo IC)

Pin No	IN/OUT	Signal name	Function
1	IN	TEST	Test Mode "H"
2	IN	C-FG	Capstan FG
3	IN	V-REF IN	Reference Voltage (2.5V) IN
4	OUT	V-REF OUT	Reference Voltage (2.5V) OUT
5	IN	CTL-IN R	CTL Clamp (Reverse)
6	——	———	————————
7	IN	CT-INF	CTL Clamp (Foward)
8	OUT	CTL-A OUT	CTL Amp (OUT)
9	IN	GND	CTL GND
10	IN	CT-A GND	CTL Amp AC GND
11	IN	CTL-IN	CTL Amp (IN)
12	IN	AV_{DD}	V_{DD} (+5V) Analogue
13	——	———	————————
14	OUT	CTL-OUT	REC CTL
15	IN	V-SYNC	V-SYNC (50Hz)
16	IN	PG-MM	PG Mono Multi
17	IN	V_{DD}	V_{DD} Digital
18	IN	TR-MM	Tracking, Mono Multi
19	IN	GND	GND
20	IN	REC CTL CONT	REC CTL
21	IN	S-DAT	Serial Data
22	IN	S-CLK	Serial Clock
23	IN	GND	GND
24	IN	FSC	Clock (4.43MHz)
25	——	———	————————
26	OUT	D-SP	Drum Speed PWM
27	OUT	D-PH	Drum Phase PWM
28	OUT	HSW 4	Head Switching (SW4)
29	OUT	HSW 3	Head Switching (SW3)
30	OUT	HSW 2	Head Switching (SW2)
31	OUT	HSW 1	Head Switching (SW1)
32	OUT	HSW 12.5	Head Switching (12.5Hz)
33	OUT	HSW 25	Head Switching (25Hz)
34	OUT	C-SP	Capstan Speed PWM
35	OUT	C-PH	Capstan Phase PWM

Pin No	IN/OUT	Signal name	Function
36	IN	GND	Capstan FG (SP-1484Hz, LP-742Hz)
37	OUT	LP-H	Capstan Speed Mode (SP-"L", LP-"H")
38	IN	GND	GND
39	IN	D-FG	Drum FG (600Hz)
40	——	———	————————
41	IN	C-FG②	Capstan FG 2
42	IN	C-FG①	Capstan FG Amp (SP-1484Hz, LP-742Hz)
43	IN	D-PG	Drum PG (37.5Hz)

SYSTEM CONTROL TIMING CHART

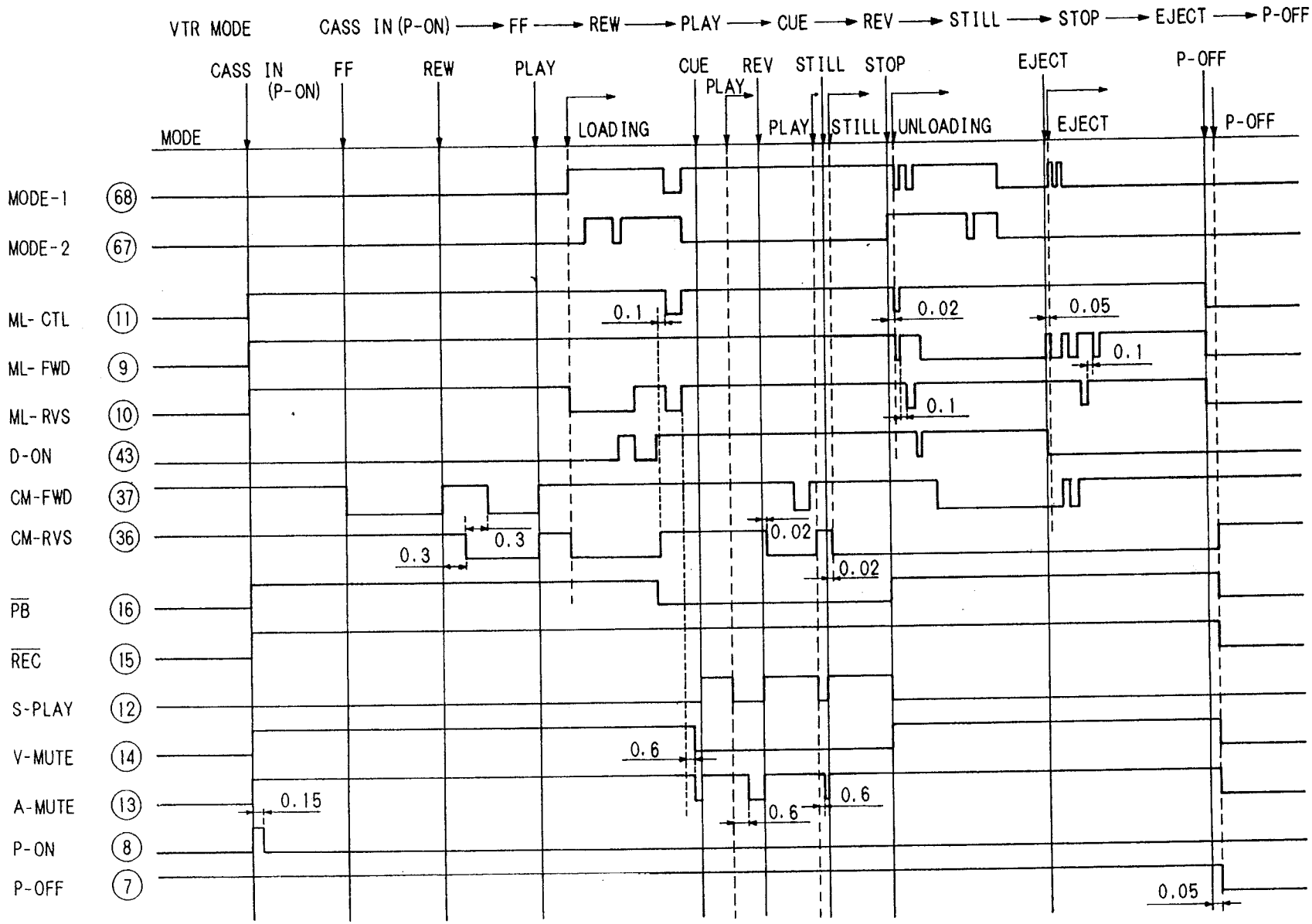

NOTICE ALL TIME VALUES IN SECOND.

SYSTEM CONTROL TIMING CHART

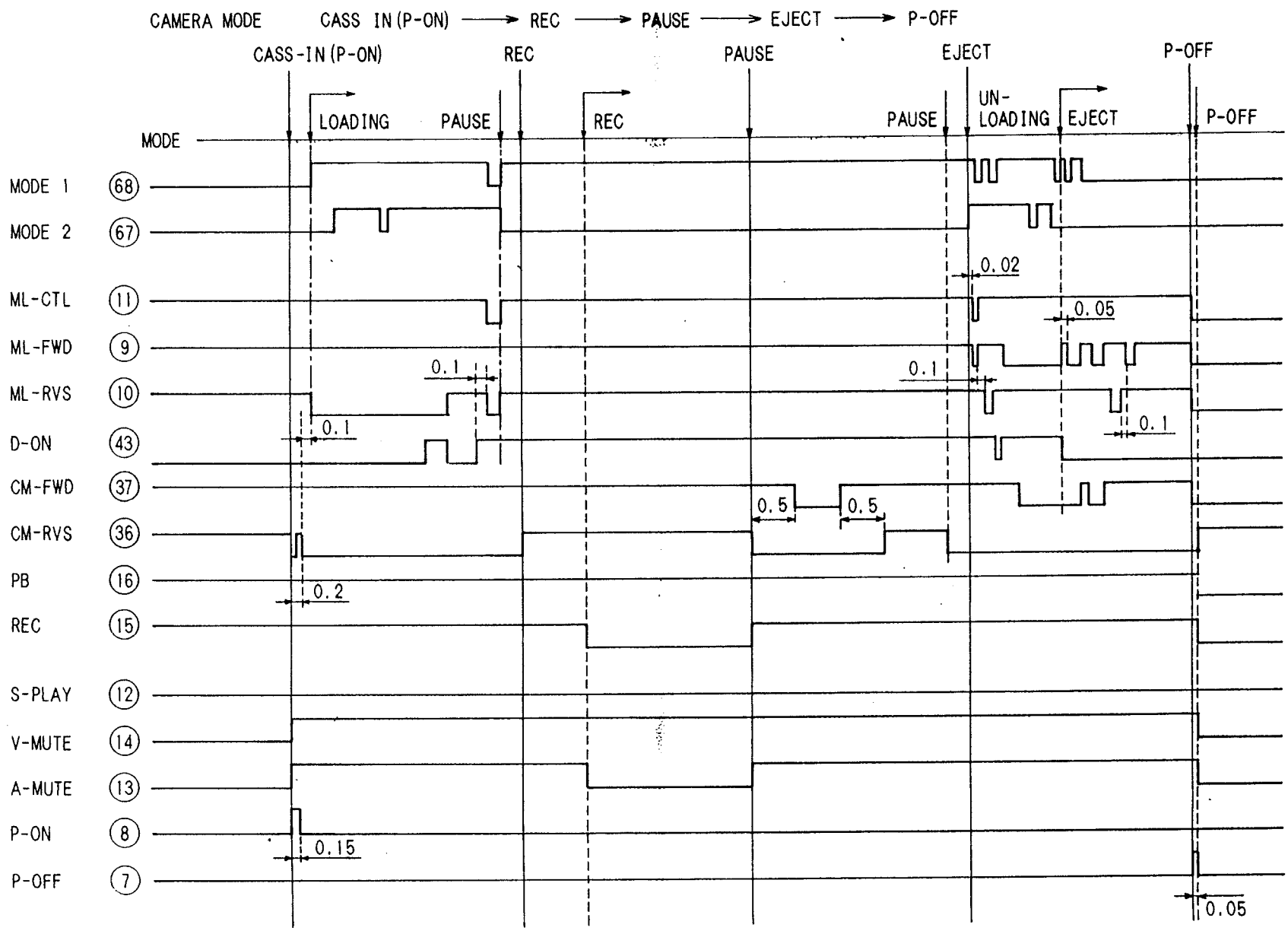

NOTICE ALL TIME VALES IN SCOND.

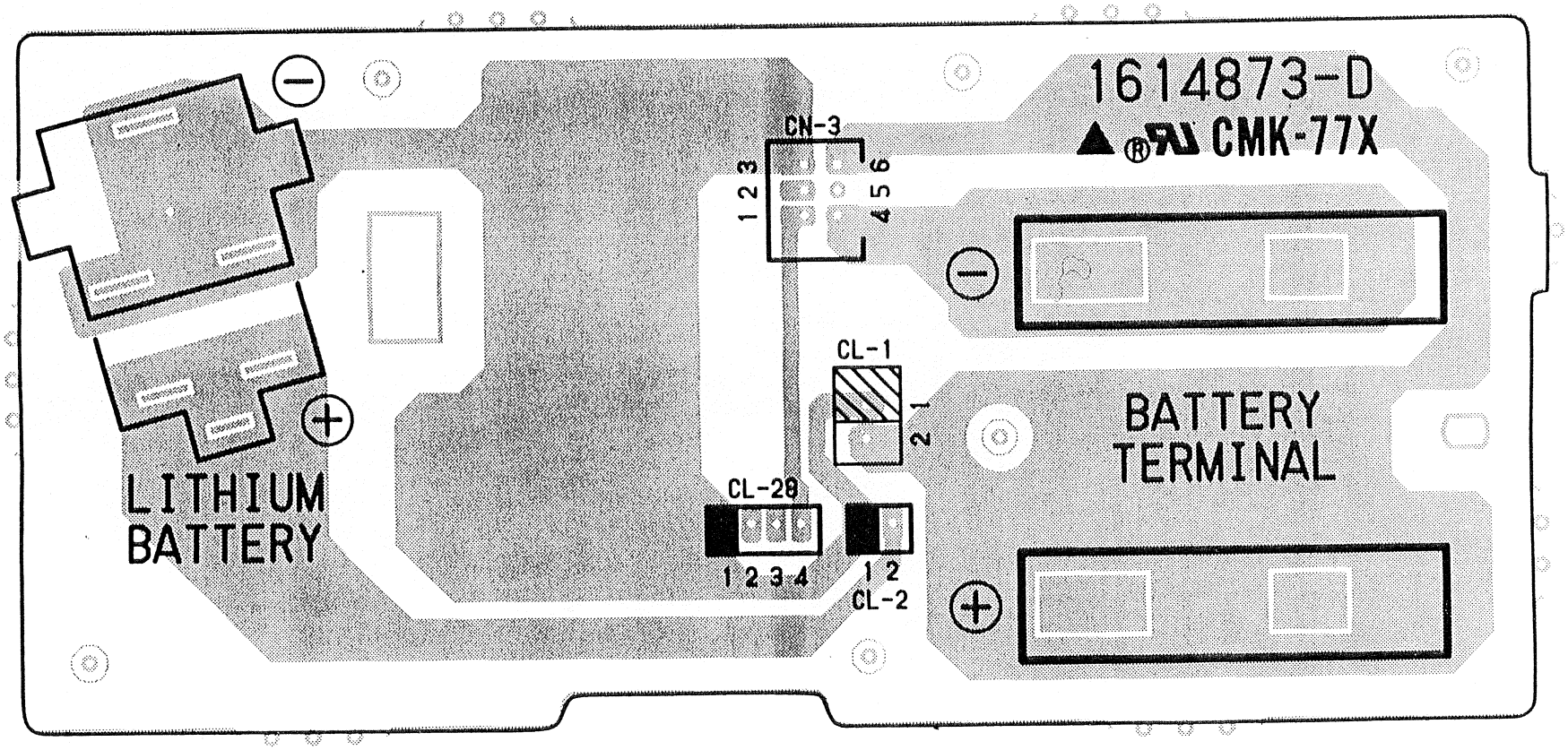

POWER PCB
(TOP VIEW)

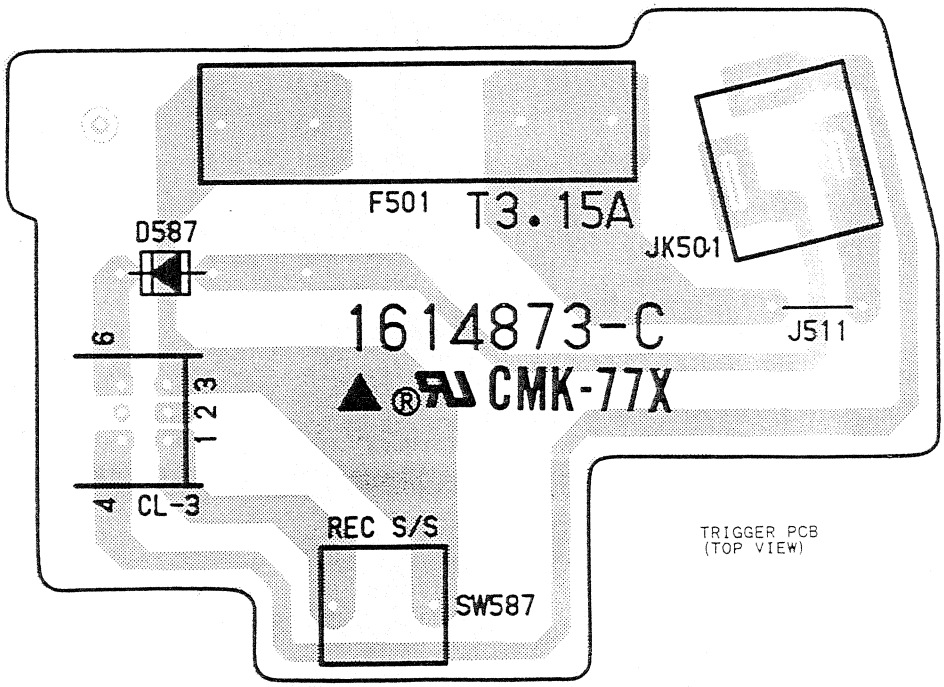

TRIGGER PCB
(TOP VIEW)

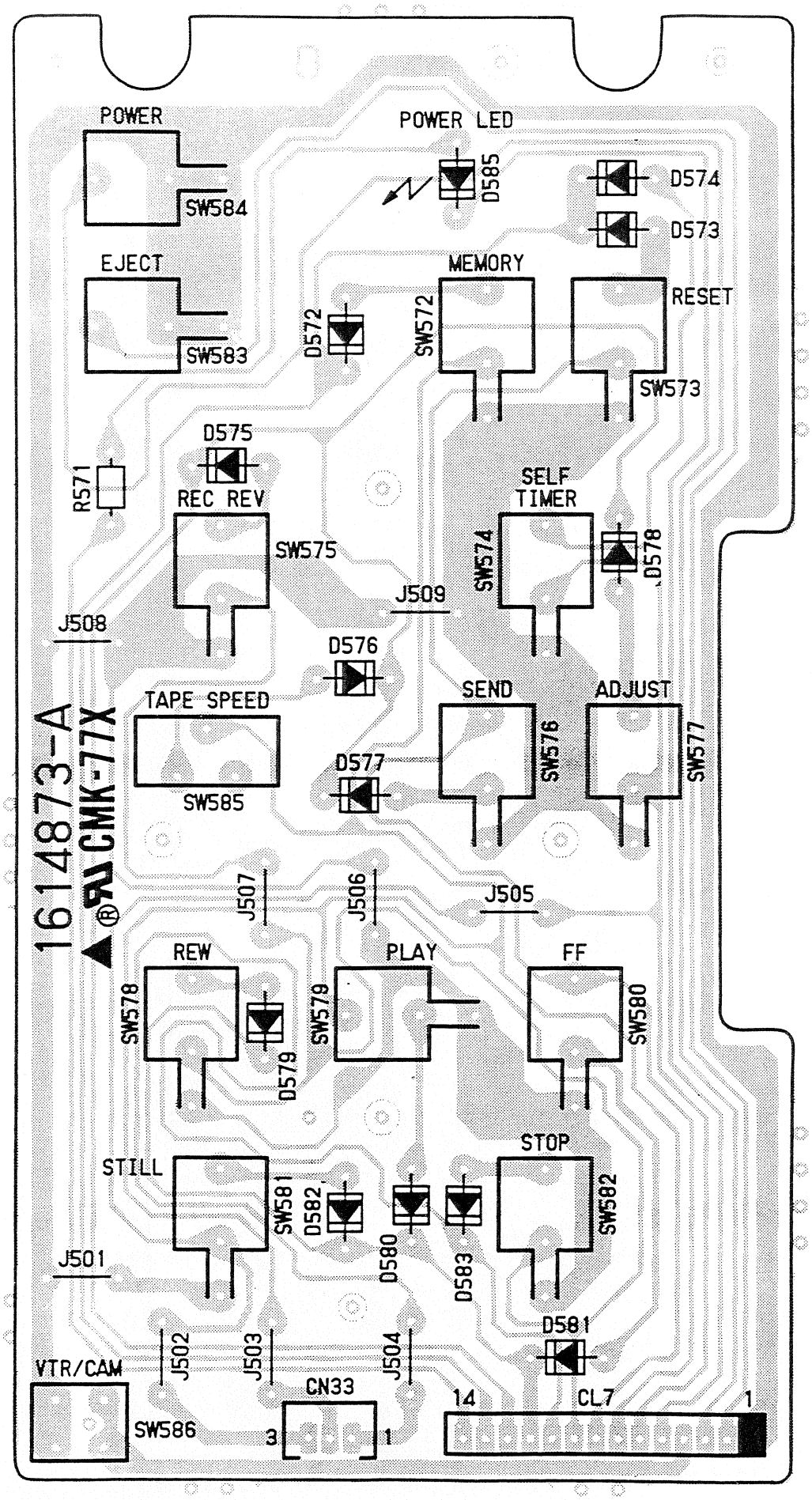

REAR PCB
(TOP VIEW)

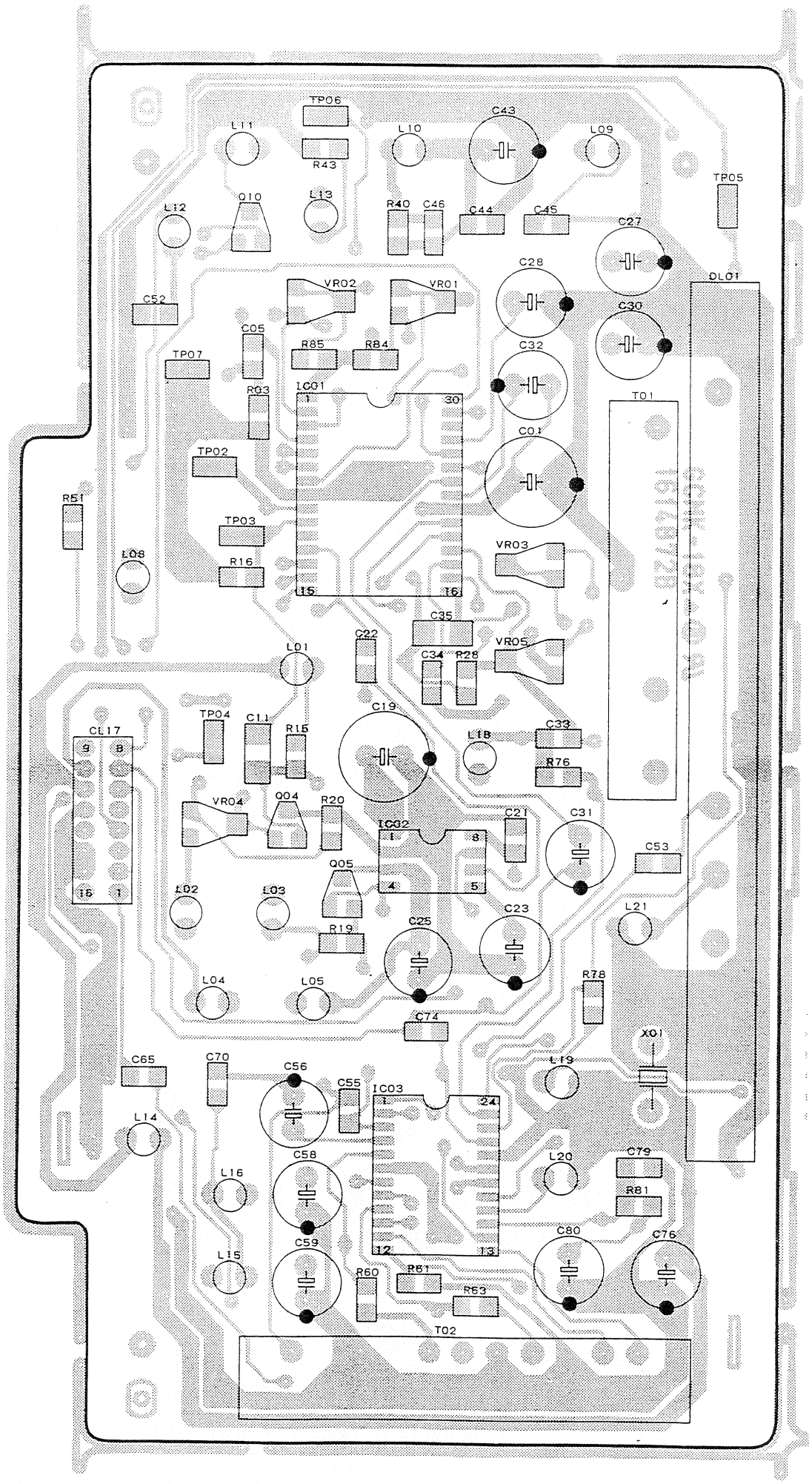

VIDEO SUB PCB
(TOP VIEW)

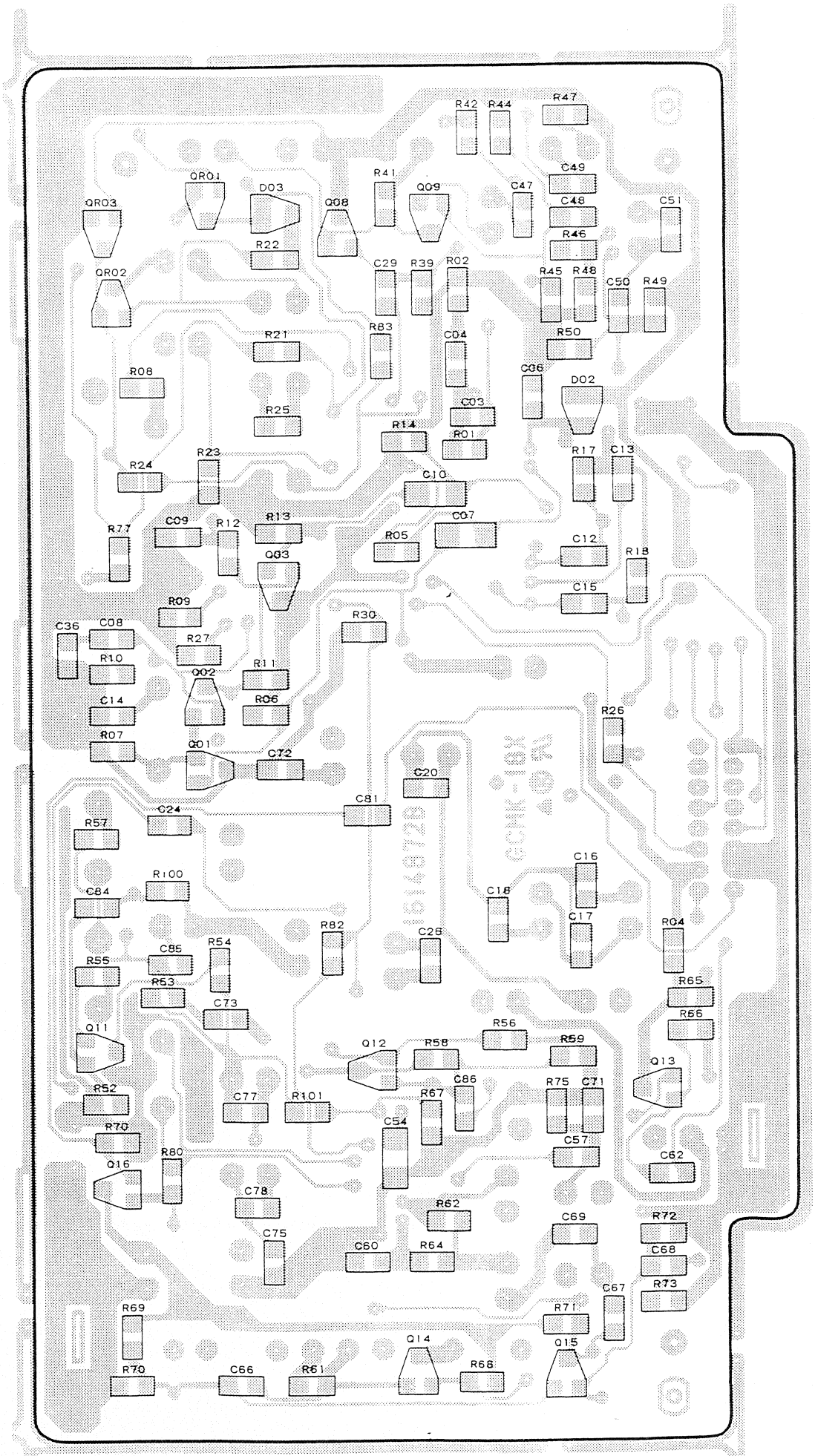

VIDEO SUB PCB
(BOTTOM VIEW)

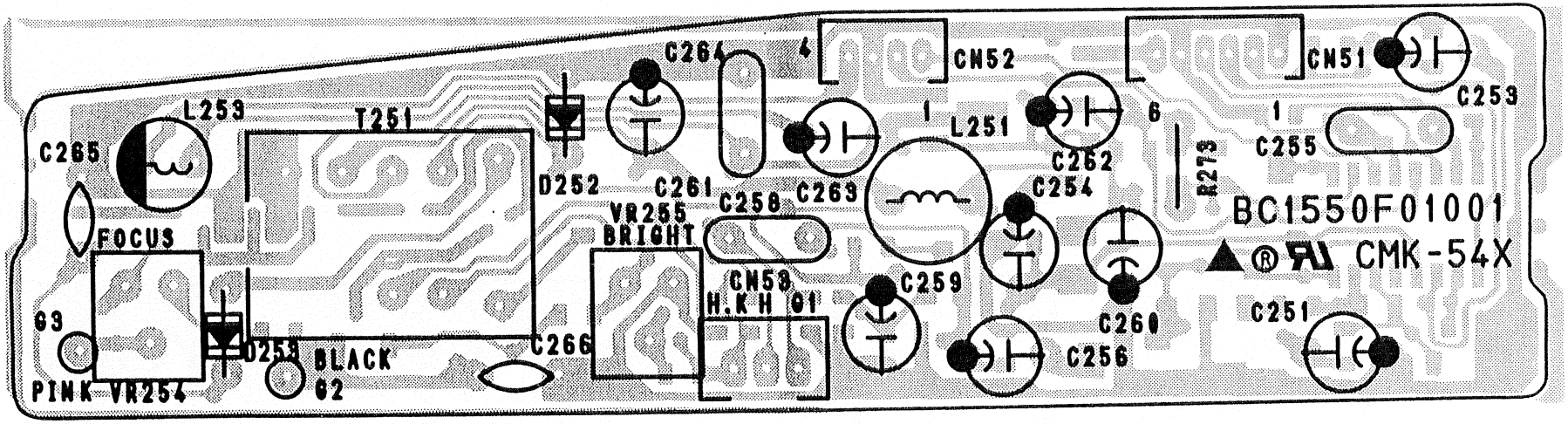
C264
4
CN52
CN51
C253
L253
T251
1
L251
6
1
C265
C262
C255
D252
C261
C263
C254
R273
VR255
BRIGHT
C258
BC1550F01001
FOCUS
CMK-54X
CN50
H.K H 01
C259
G3
C260
C251
D253
BLACK
C266
C256
PINK VR254
G2

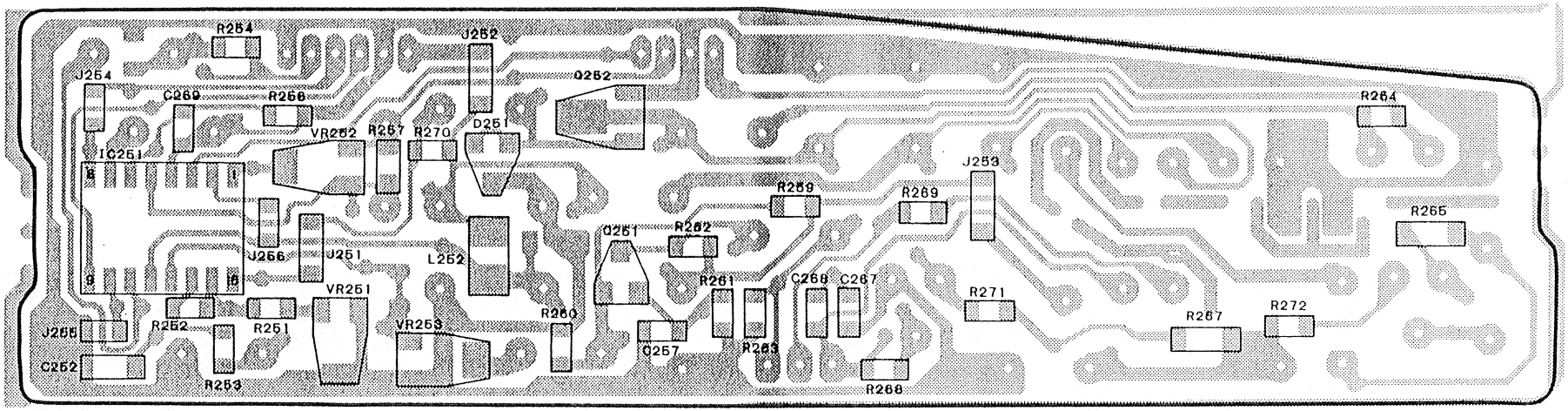
R254
J252
J254
C269
R256
Q252
R264
VR252
R257
R270
D251
IC251
J253
R259
R269
R265
Q251
R262
J256
J251
L252
R261
C268
C267
R271
VR251
R252
R251
VR253
R260
R267
R272
J255
C257
R263
C252
R253
R268

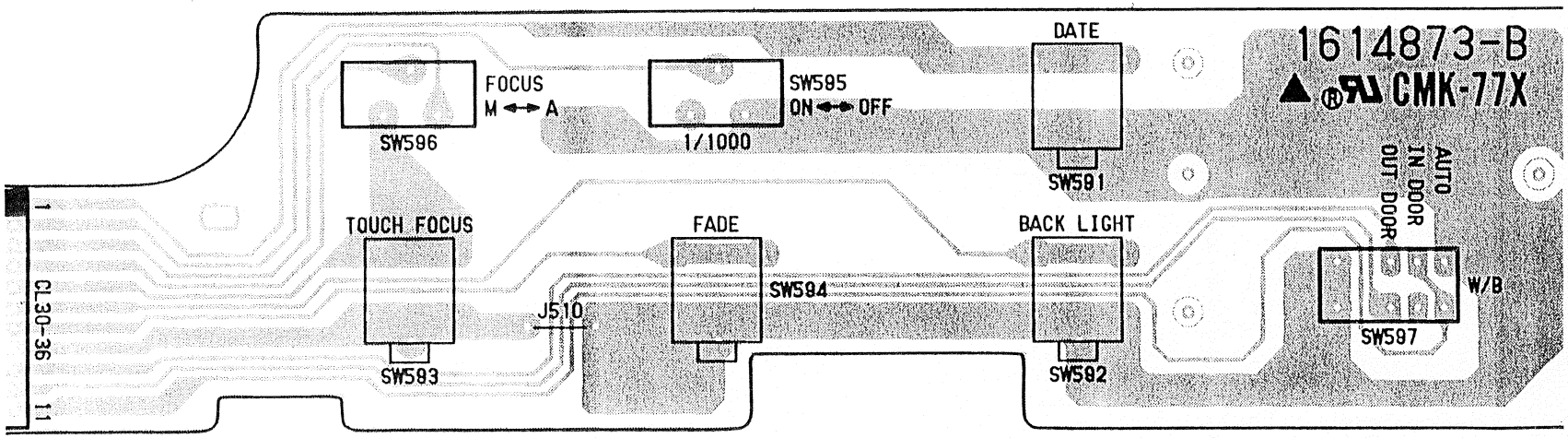

SIDE PCB
(TOP VIEW)

DC-DC CONV. PCB
(BOTTOM VIEW)

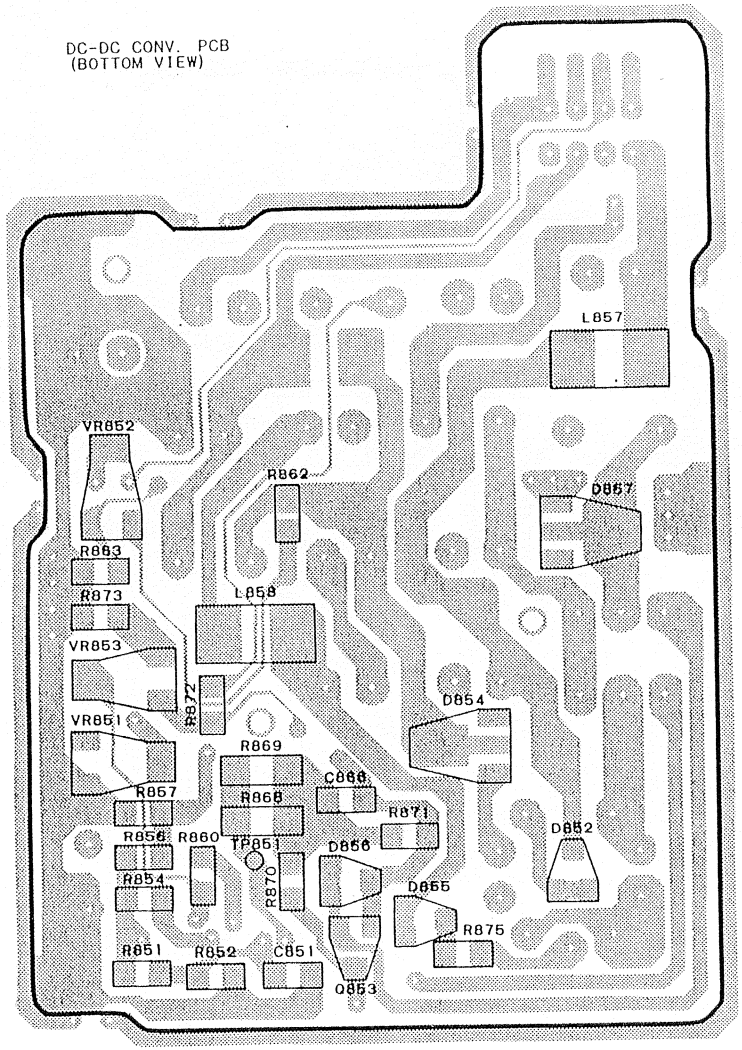

DC-DC CONV. PCB
(TOP VIEW)

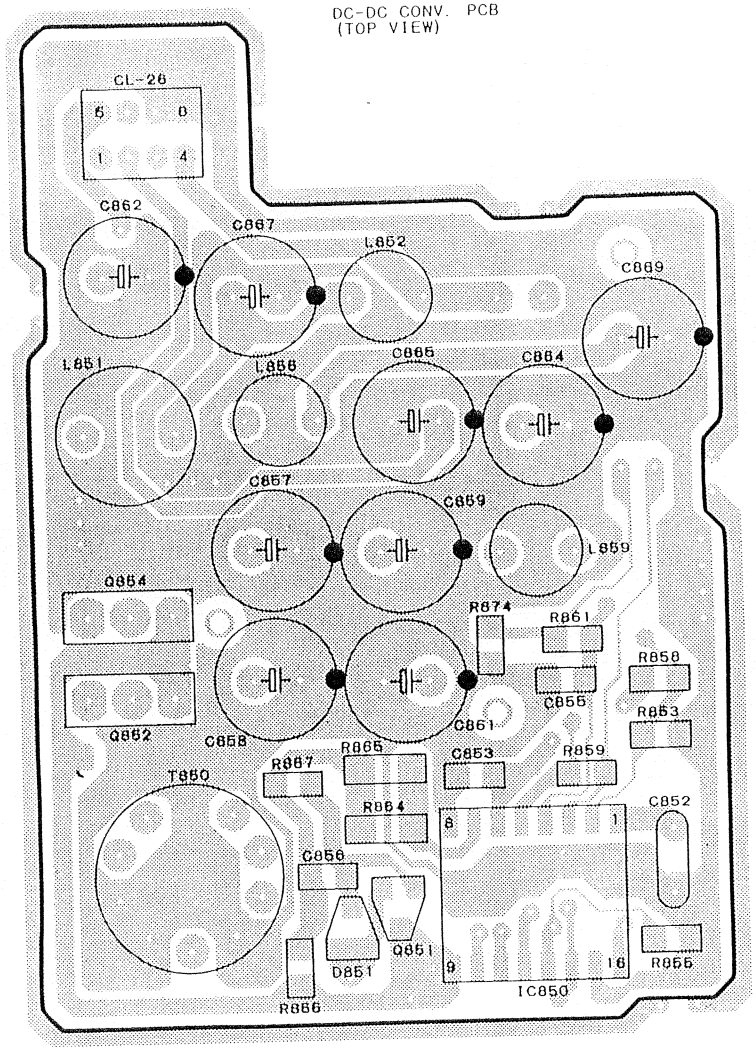

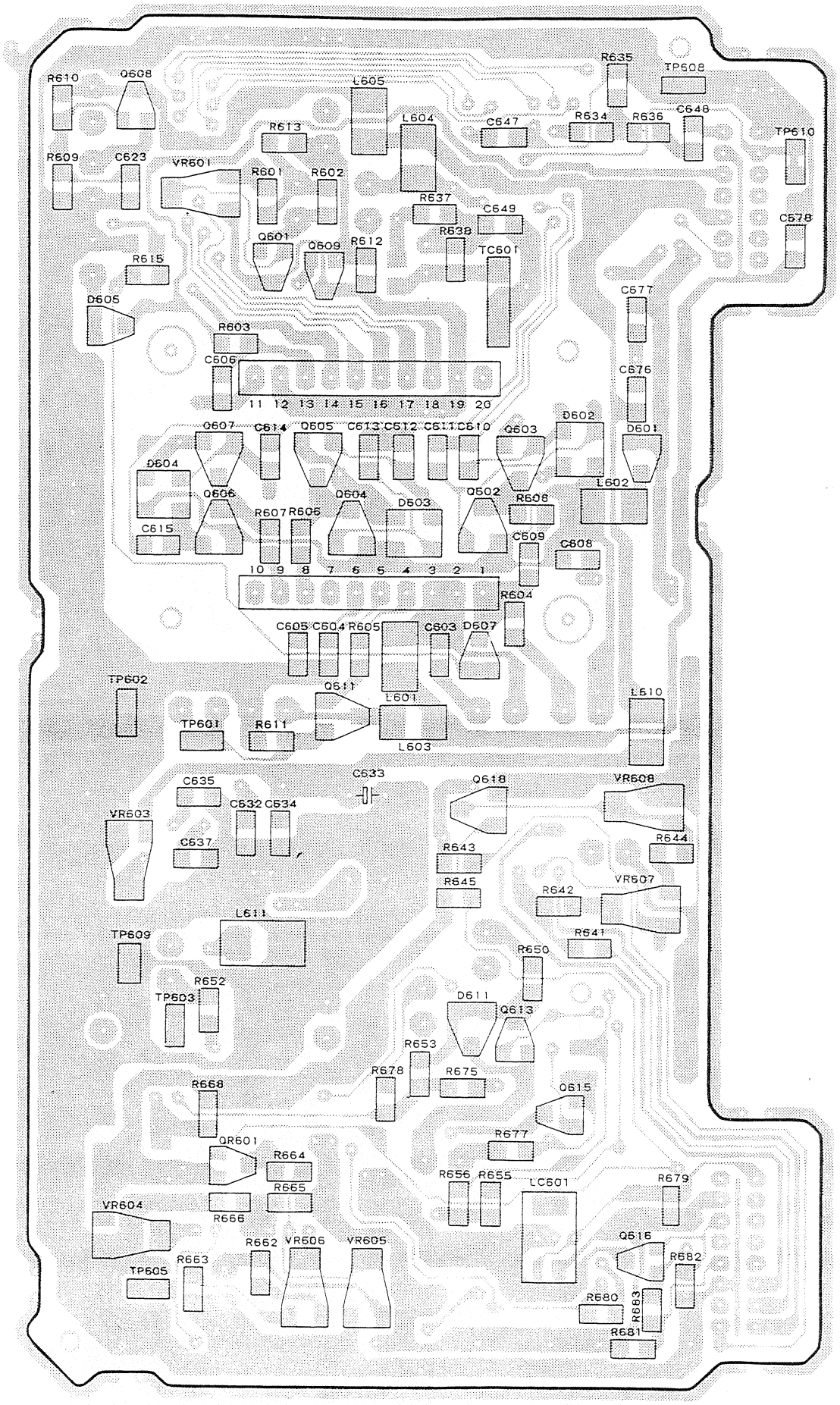

CCD PCB
(BOTTOM VIEW)

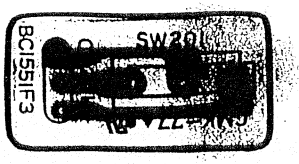

CHARGER SW PCB
(TOP VIEW)

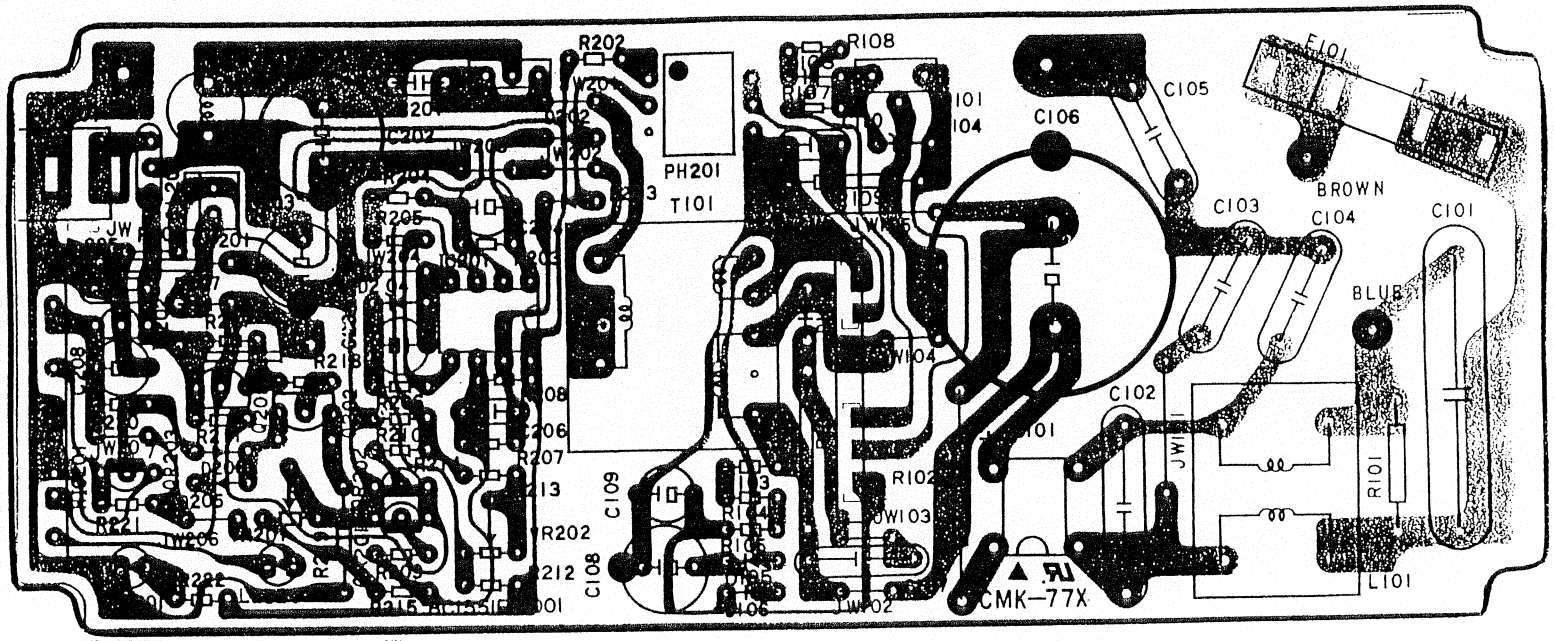

CHARGER PCB
(TOP VIEW)

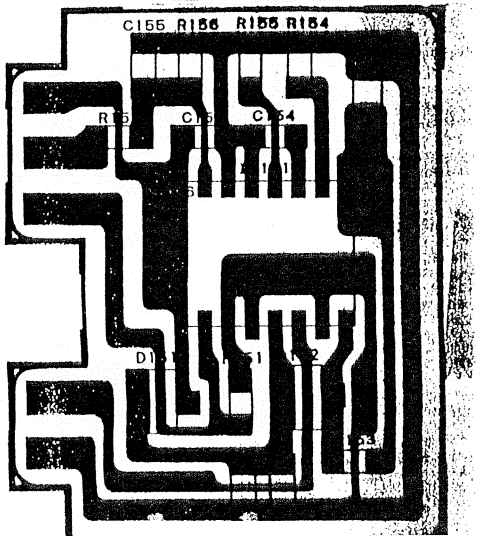

PRIMARY CTL PCB
(TOP VIEW)

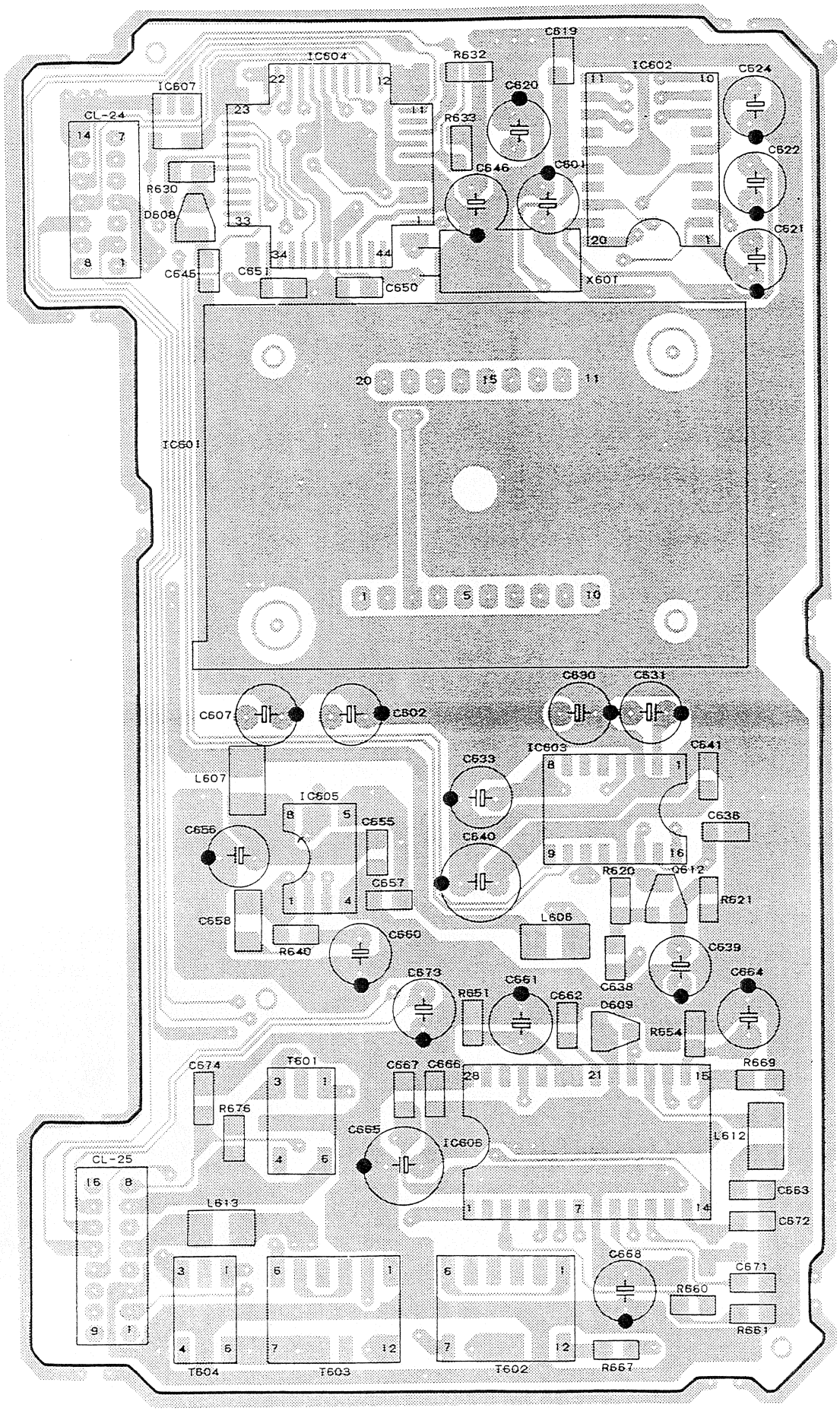

CCD PCB
(TOP VIEW)

BLOCK DIAGRAM (CHARGER)

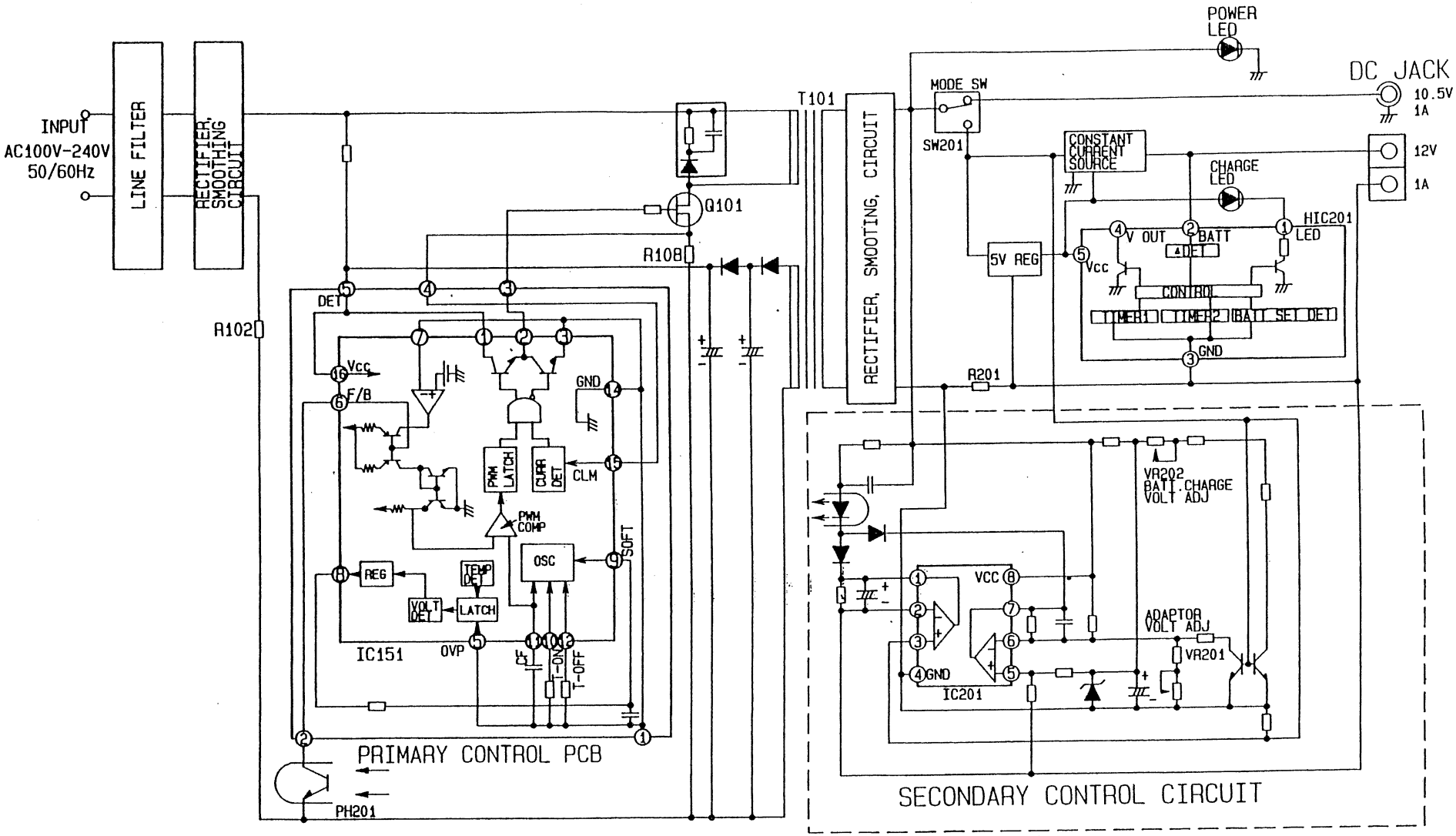

C1551EA

WIRING DIAGRAM

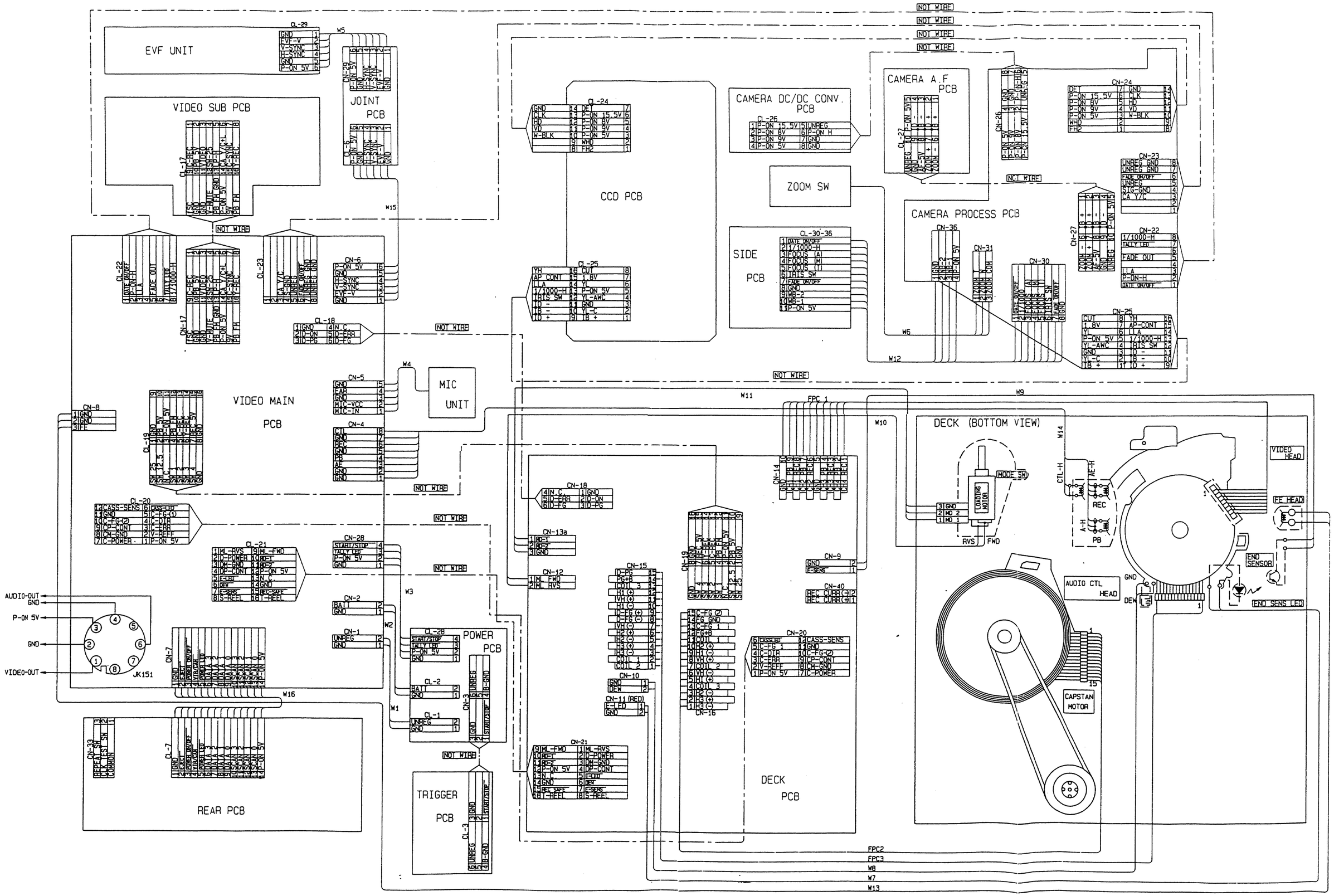

SYSTEM CONTROL / SERVO / AUDIO BLOCK DIAGRAM

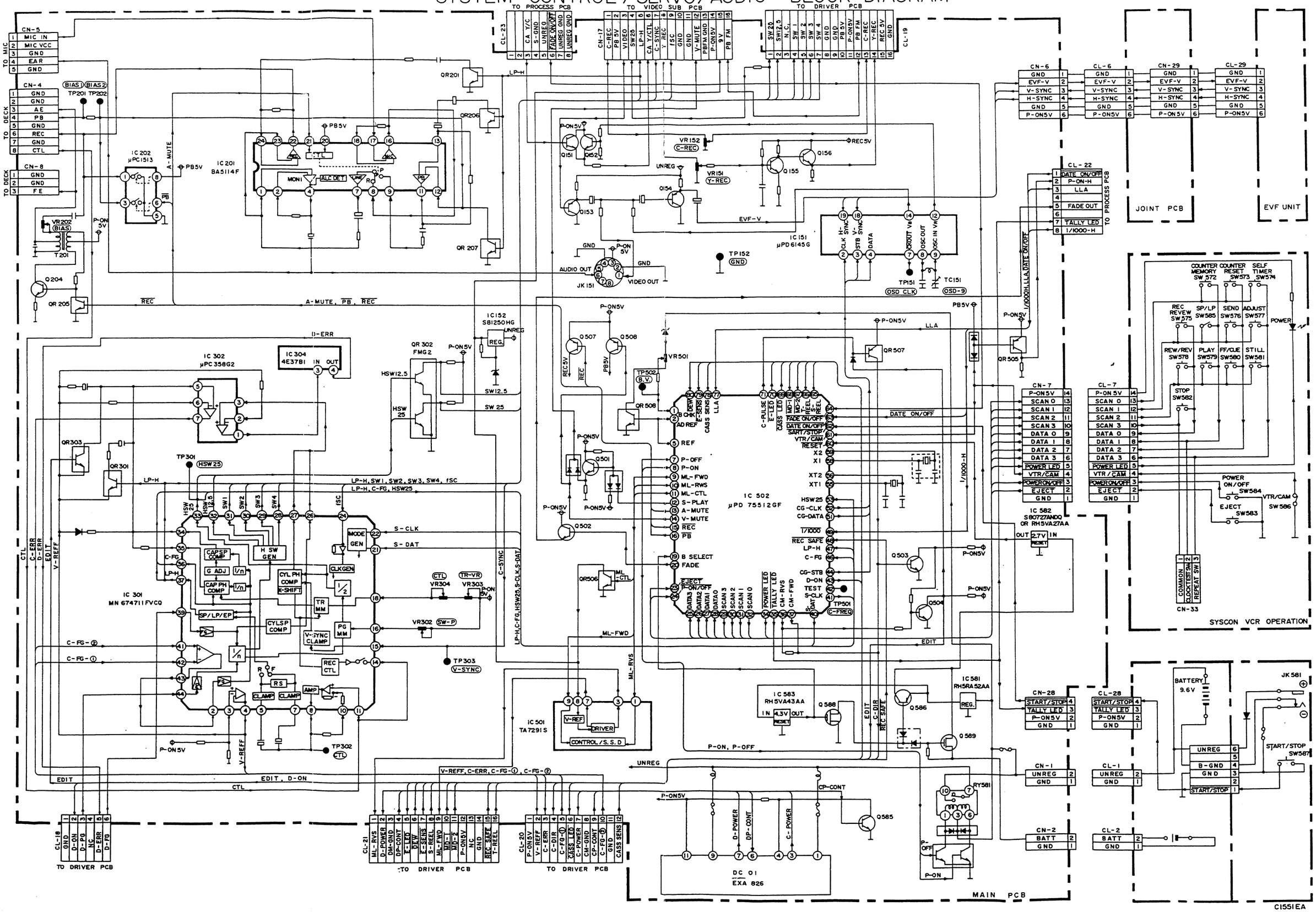

VIDEO/DRIVER BLOCK DIAGRAM

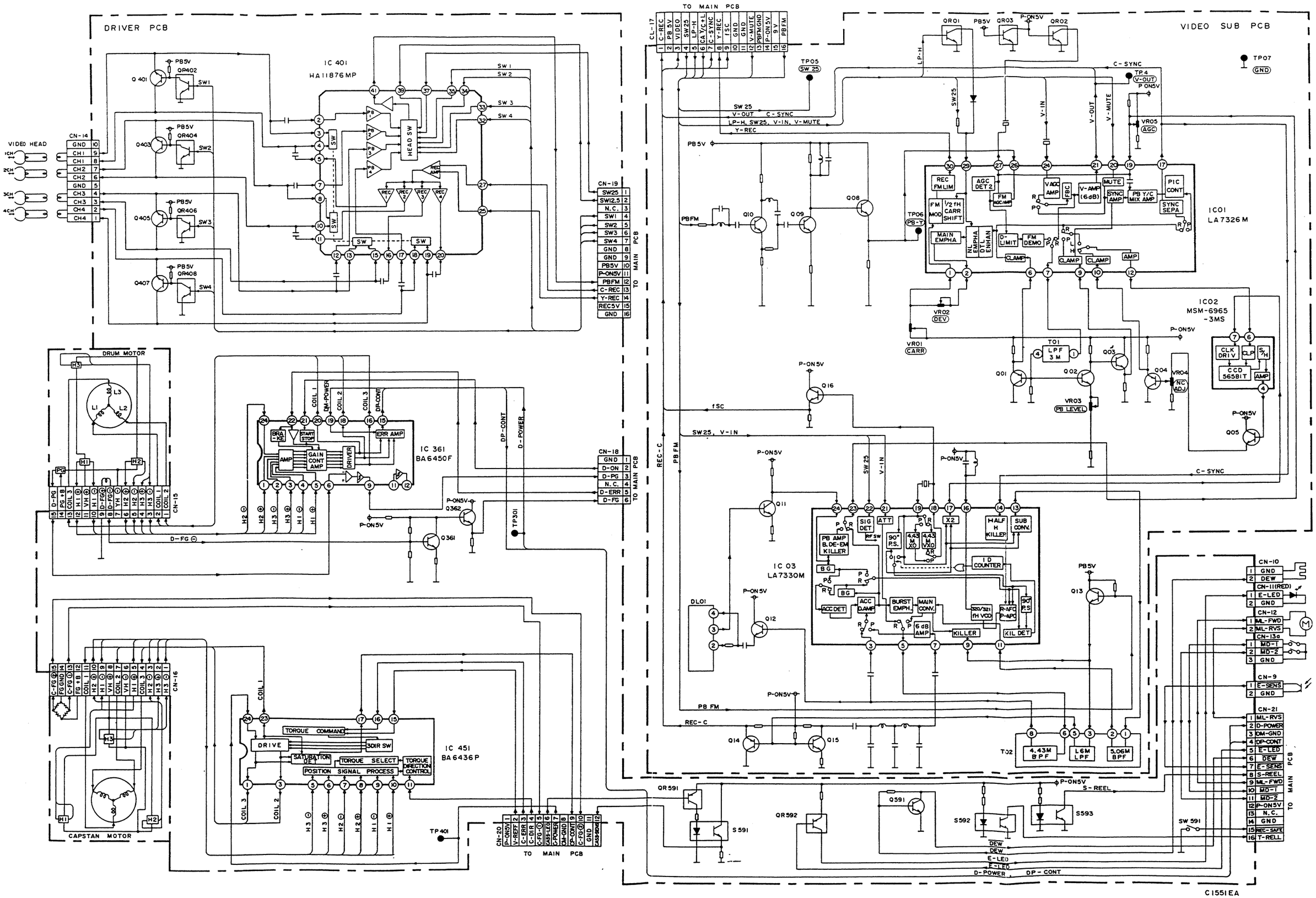

MAIN

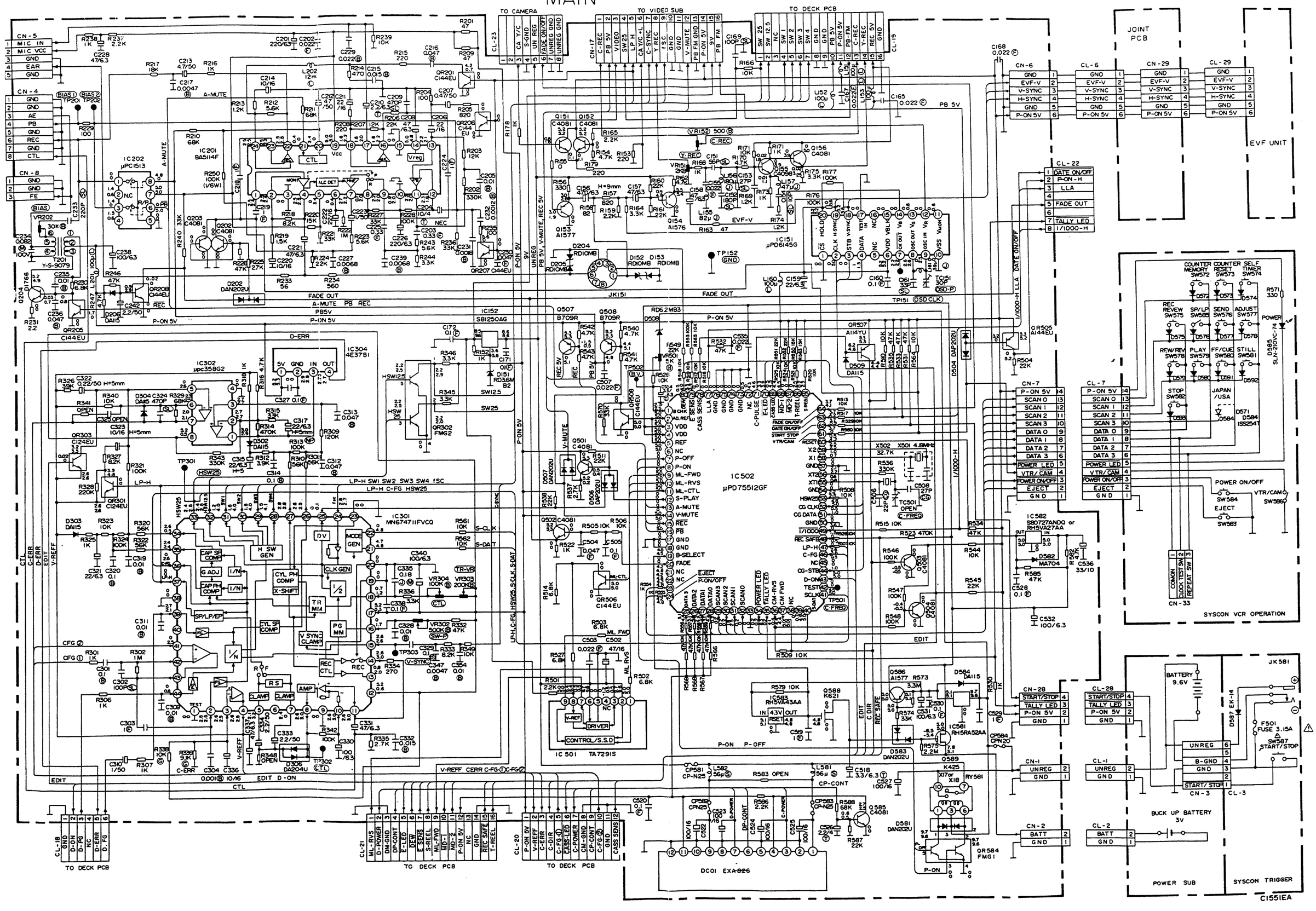

TO CAMERA
TO VIDEO SUB
TO DECK PCB
JOINT PCB
EVF UNIT
IC502 μPD75512GF
IC301 MN6747IIFVCQ
IC302 μpc358G2
IC304 4E3781
IC151 μPD6145G
IC582 S80727ANDQ or RH5VA27AA
IC501 TA7291S
IC583 RH5VA43AA
IC581 RH5RA52AA
DC01 EXA826
SYSCON VCR OPERATION
POWER SUB
SYSCON TRIGGER
BUCK UP BATTERY 3V
BATTERY 9.6V
TO DECK PCB
C1551EA

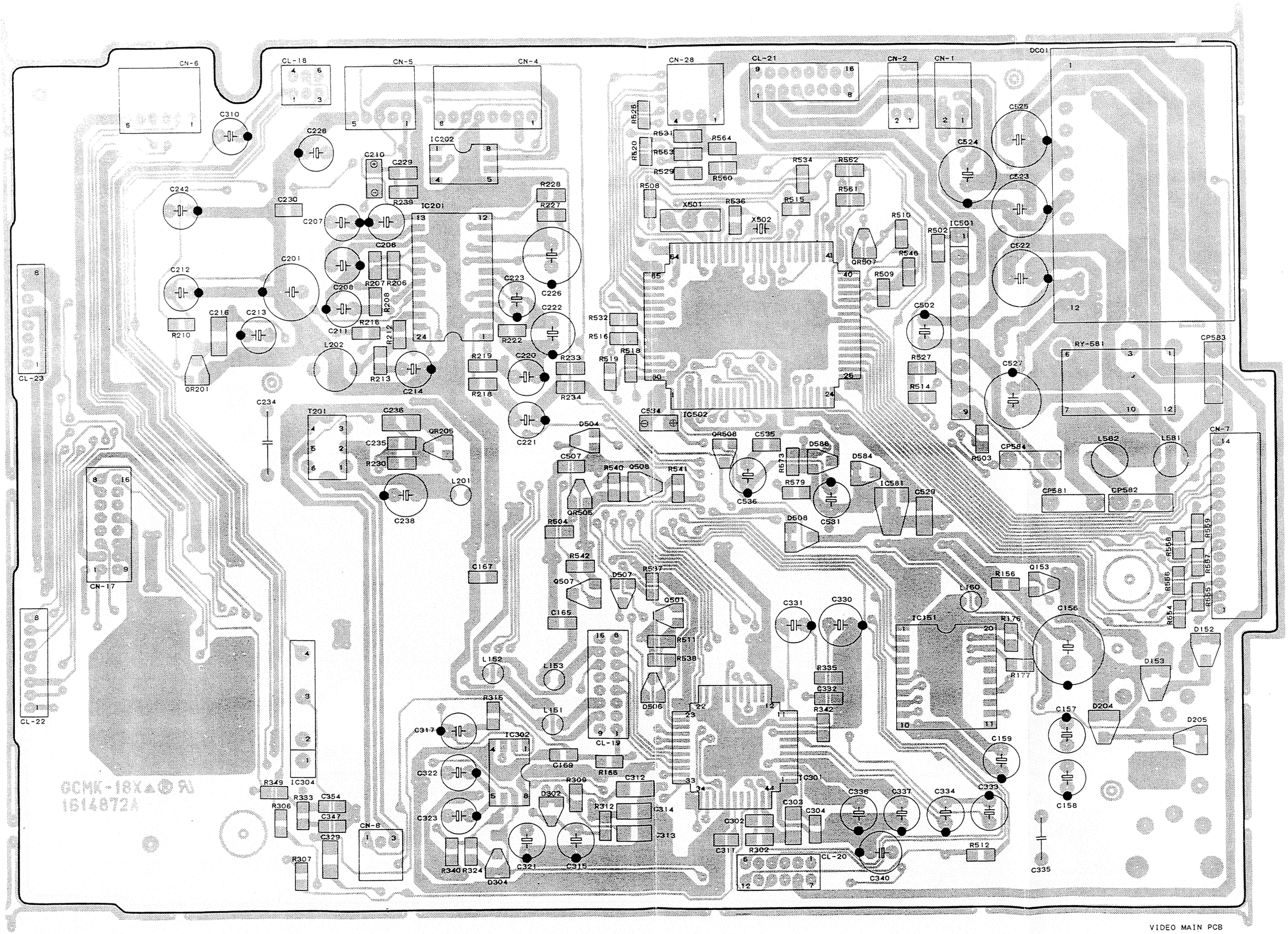

VIDEO MAIN PCB

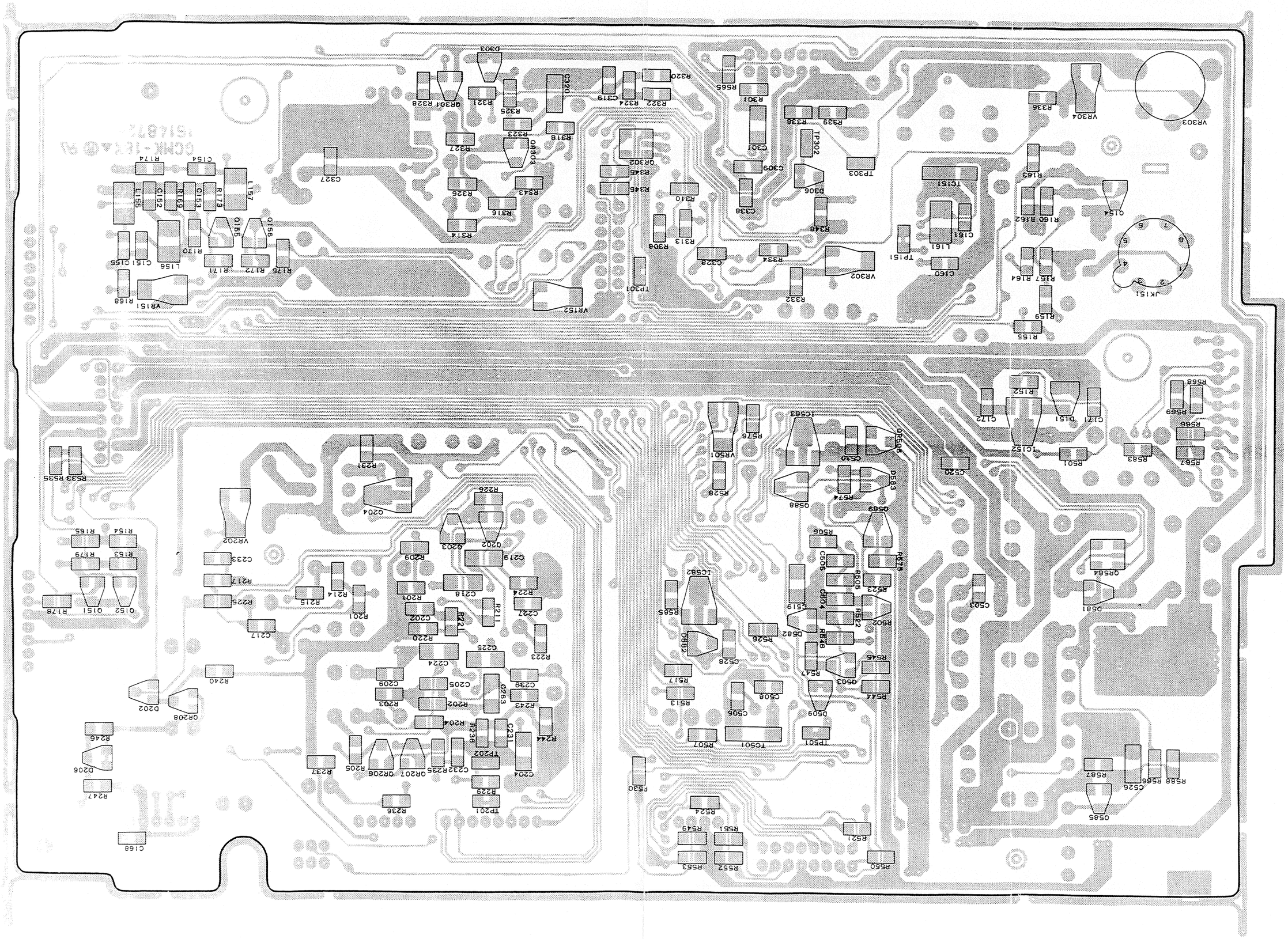

R550
R552
R553
R521
R551
R549
R524
R530
C168
TP201
R236
R247
R229
C204
C232
R235
QR207
QR206
R205
R237
D206
TP202
R244
C231
R238
R204
R246
R243
Q263
R202
R203
QR208
D202
C239
C205
C209
R240
R223
C224
C225
R220
C217
R211
R221
C202
R201
C227
R201
R214
R215
R225
Q152
Q151
R176
R224
C218
R217
C219
R209
C233
R153
R179
Q202
Q203
R154
R165
VR202
Q204
R226
R231
R533
R535
O585
R588
R586
C526
R587
TP501
TC501
R507
D509
C506
R513
C508
R544
R517
Q503
R547
R545
C528
D582
R548
D582
R526
R502
R522
C519
R585
D581
C503
R504
R523
IC582
QR584
R505
R575
C505
R506
Q589
R574
Q588
R528
D583
C520
C530
QR508
VR501
IC583
R576
R567
R583
R501
IC152
R566
C171
D151
C172
R569
R152
R568
R155
R159
JK151
R157
R164
VR152
VR151
R168
R332
TP301
C160
VR302
TP151
R334
C328
R175
R172
R171
L156
C151
C155
L161
R313
R308
R170
C161
R348
R314
Q156
Q155
R160
R162
C338
R316
R173
C153
R169
C152
L155
Q154
R310
R346
R343
R326
L157
TC151
D306
R345
C327
R163
TP303
C309
QR303
C154
R174
QR302
TP302
C301
R327
GCMK-18
R318
R323
VR303
R339
R338
VR304
R336
R325
R322
R324
C319
R321
QR301
R328
R301
C320
R565
R320
D303
1
2
3
4
5
6
7
8

DRIVER / VIDEO

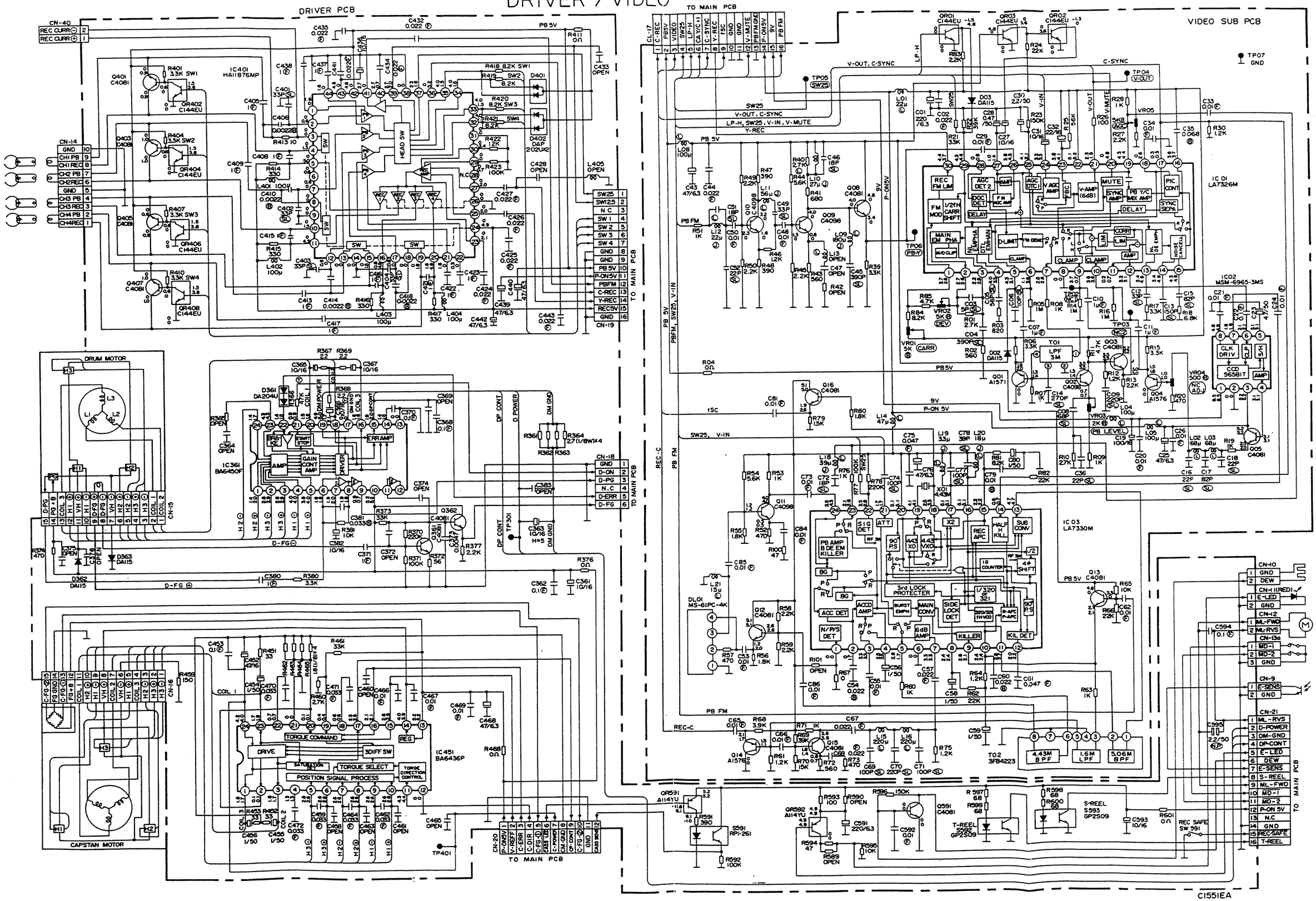

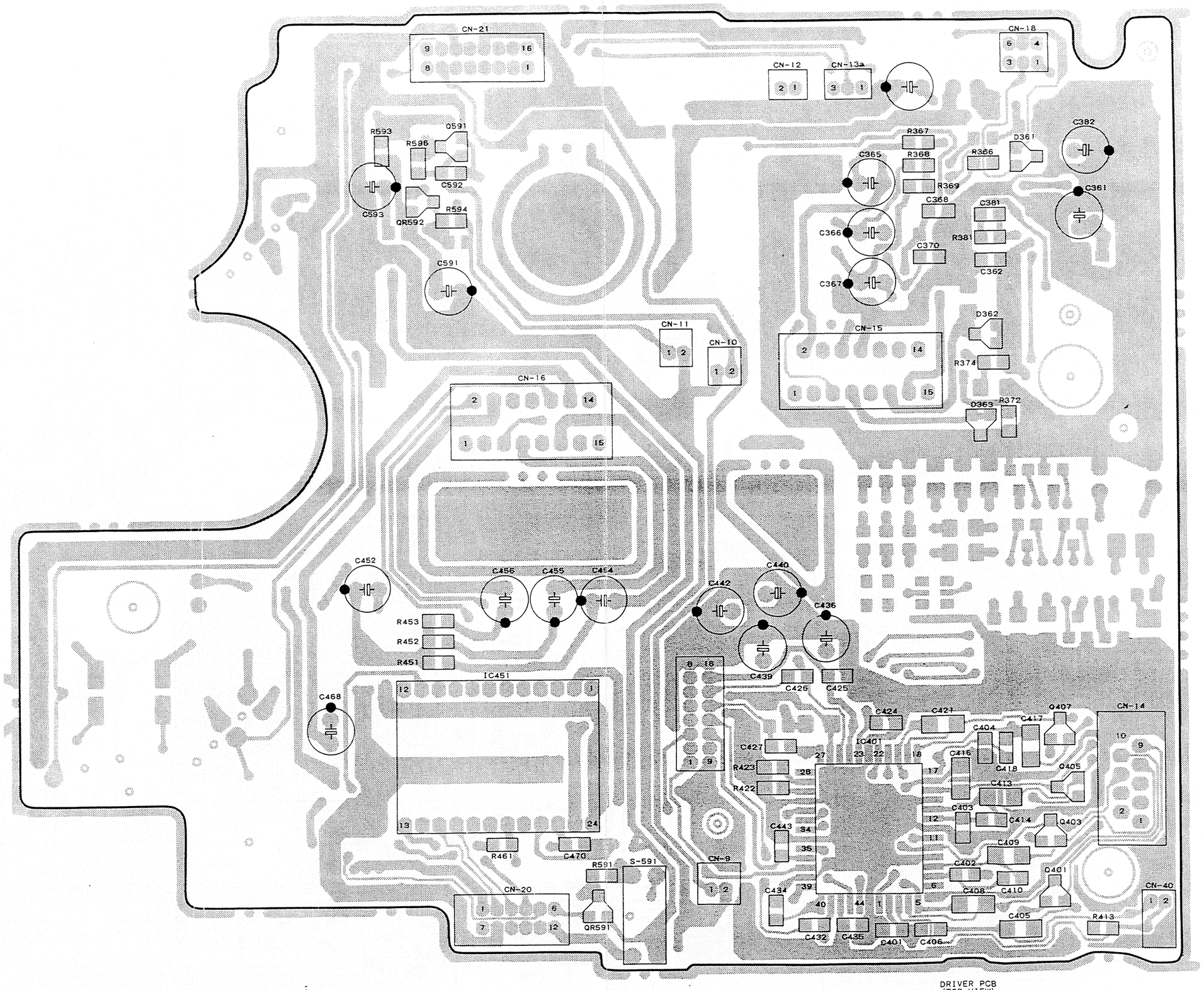

DRIVER PCB
(TOP VIEW)

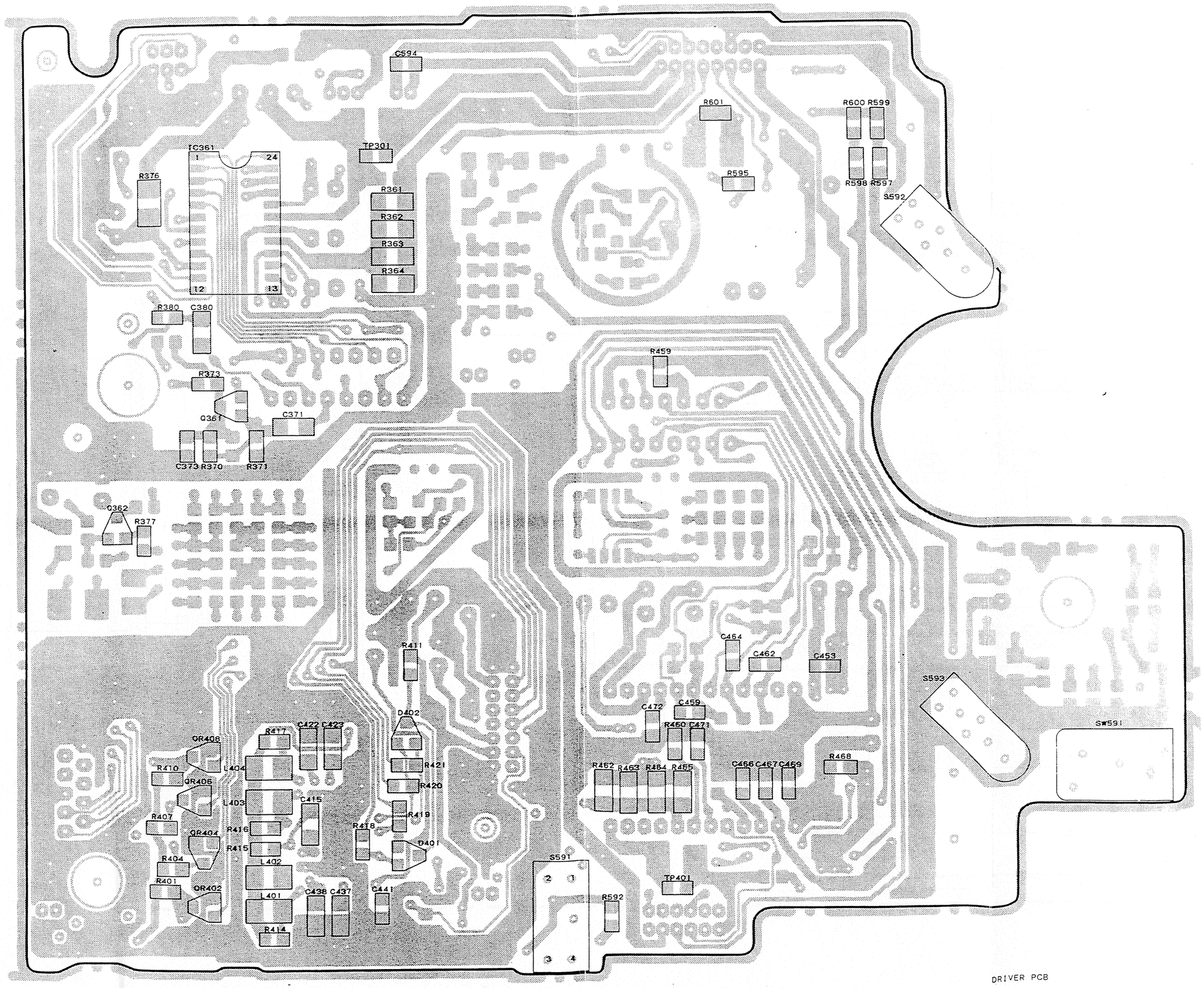
C594
R601
R600 R599
IC361
1
24
TP301
R376
R595
R598 R597
S592
R361
R362
R363
R364
12
13
R380
C380
R459
R373
Q361
C371
C373 R370
R371
Q362
R377
R411
C464
C462
C453
S593
D402
C472
C459
R460 C471
SW591
QR408
R417
C422 C423
R410
L404
QR406
R421
R420
R462 R463 R464 R465
C466 C467 C469
R468
L403
C415
R407
R419
QR404
R416
R418
R415
D401
R404
L402
S591
TP401
R401
QR402
L401
C438 C437
C441
R592
R414
2
1
3
4

DRIVER PCB

EVF UNIT

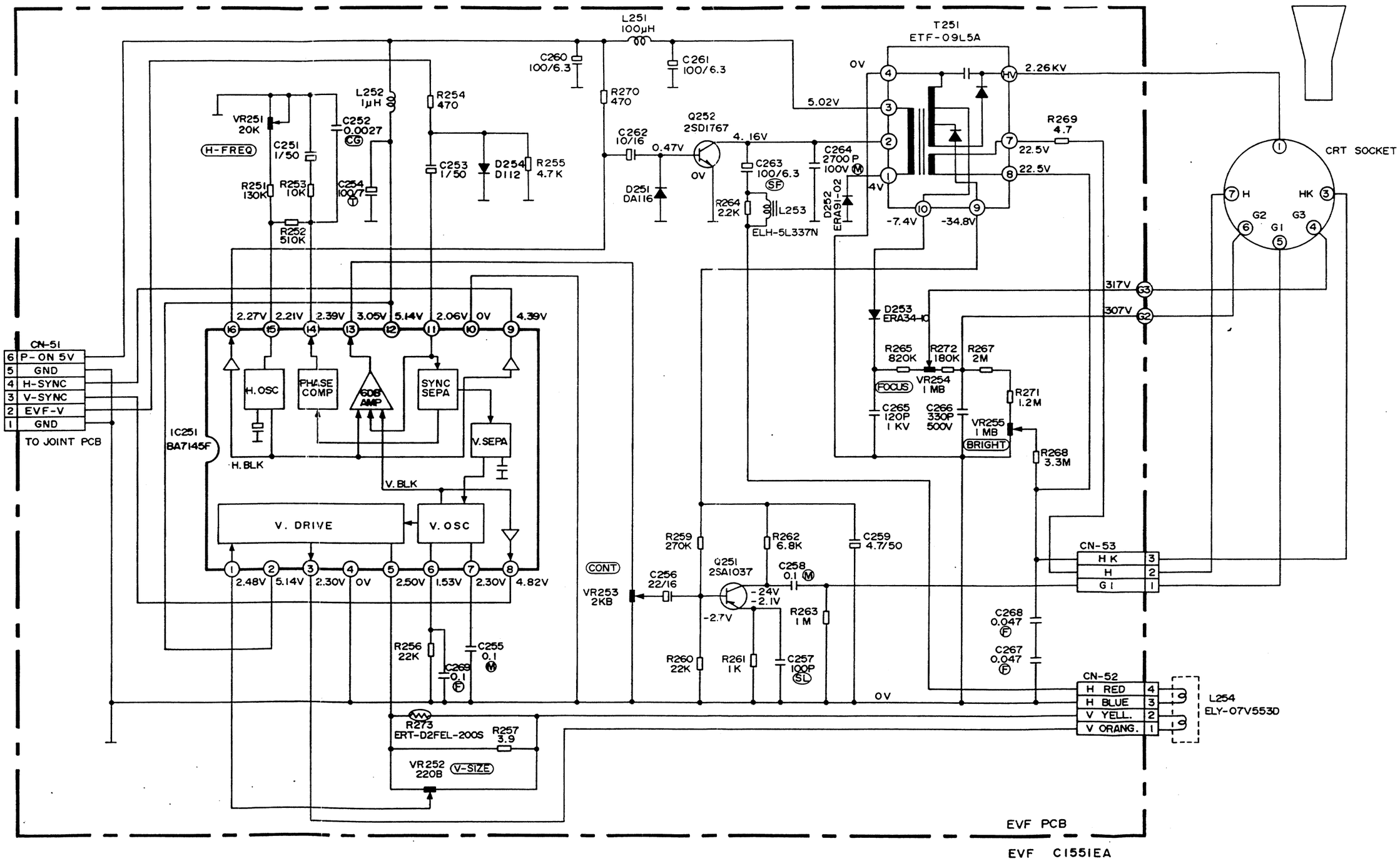

EVF C1551EA

PROCESS BLOCK DIAGRAM

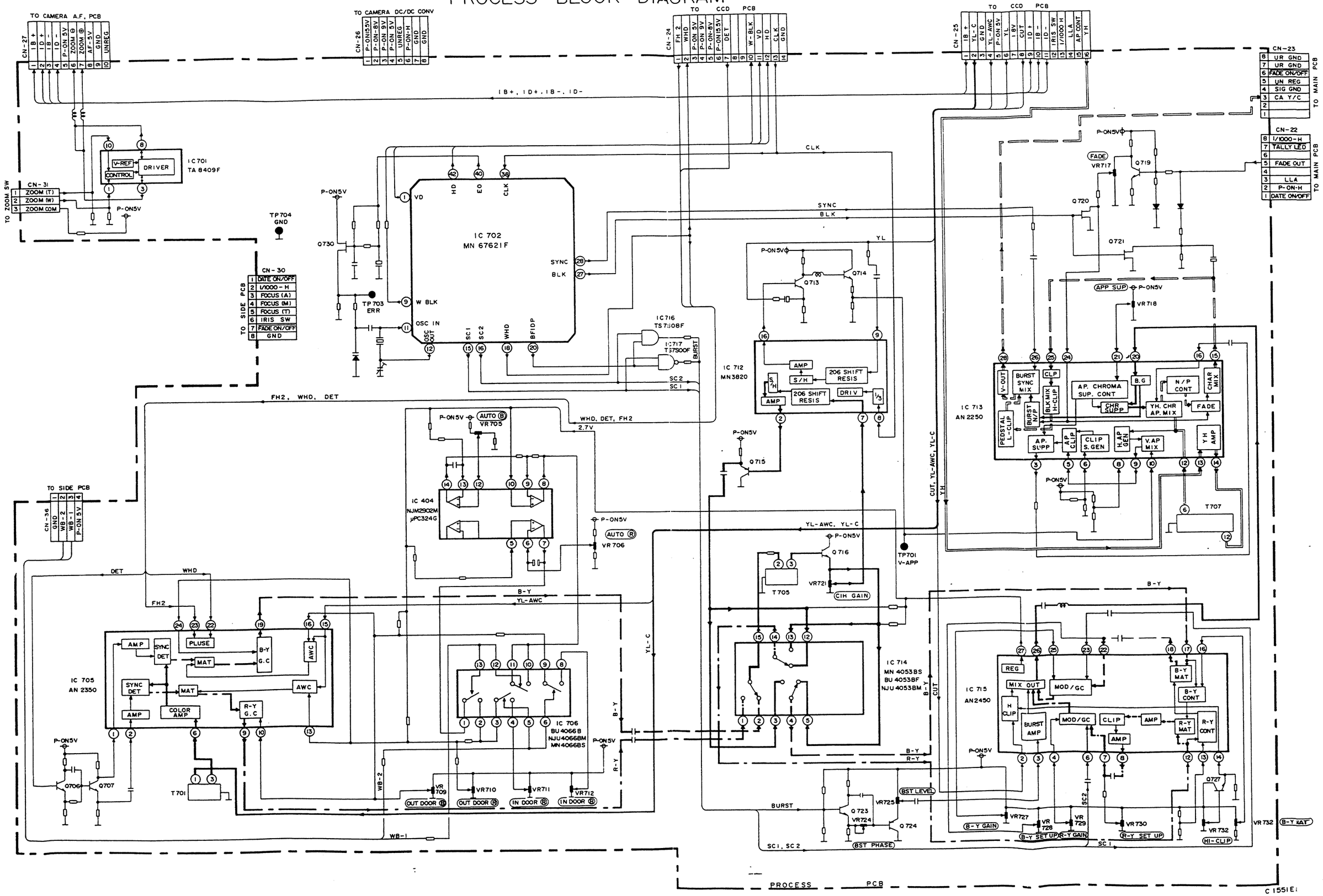

CCD / DC-DC CONV. BLOCK DIAGRAM

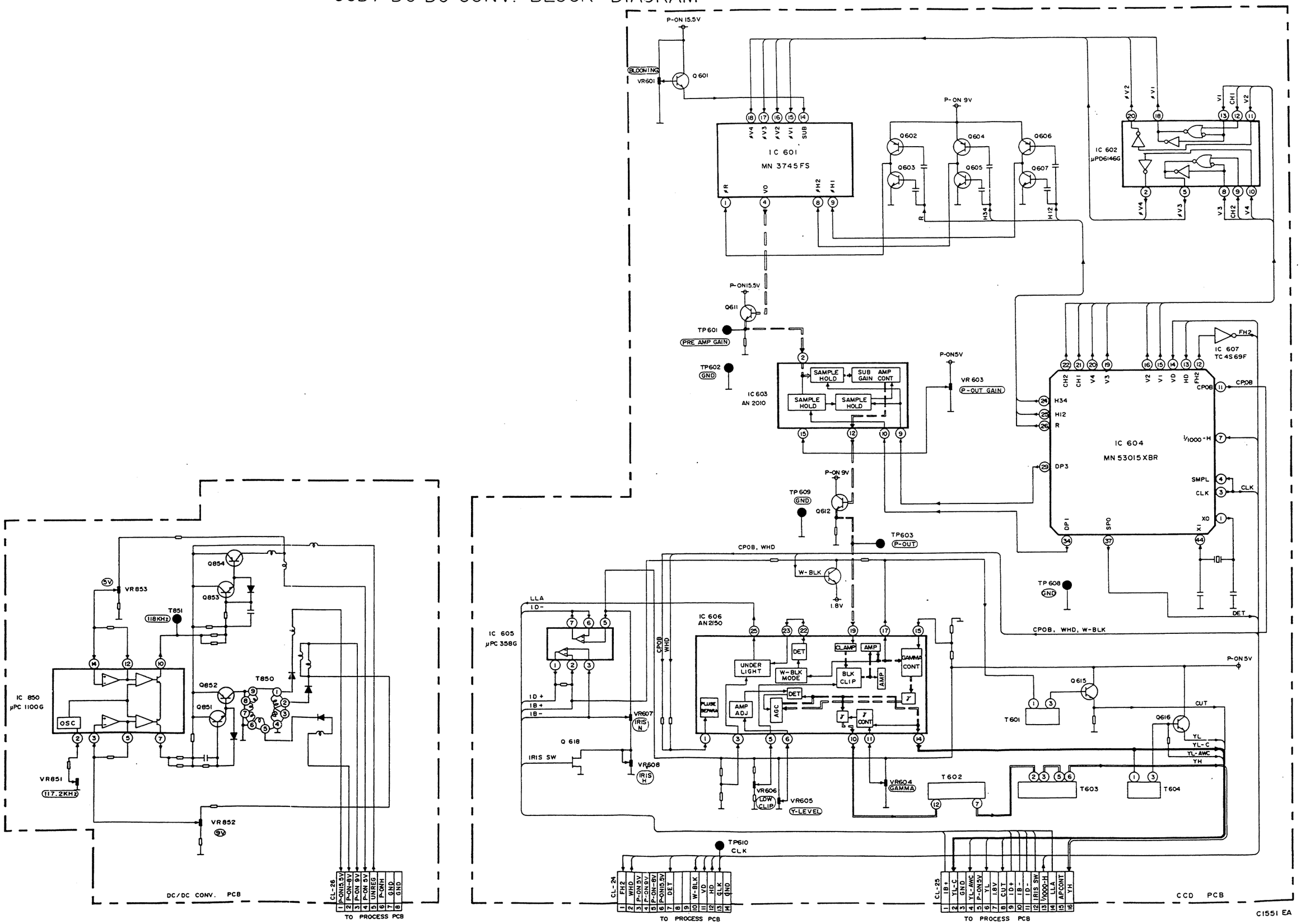

PROCESS

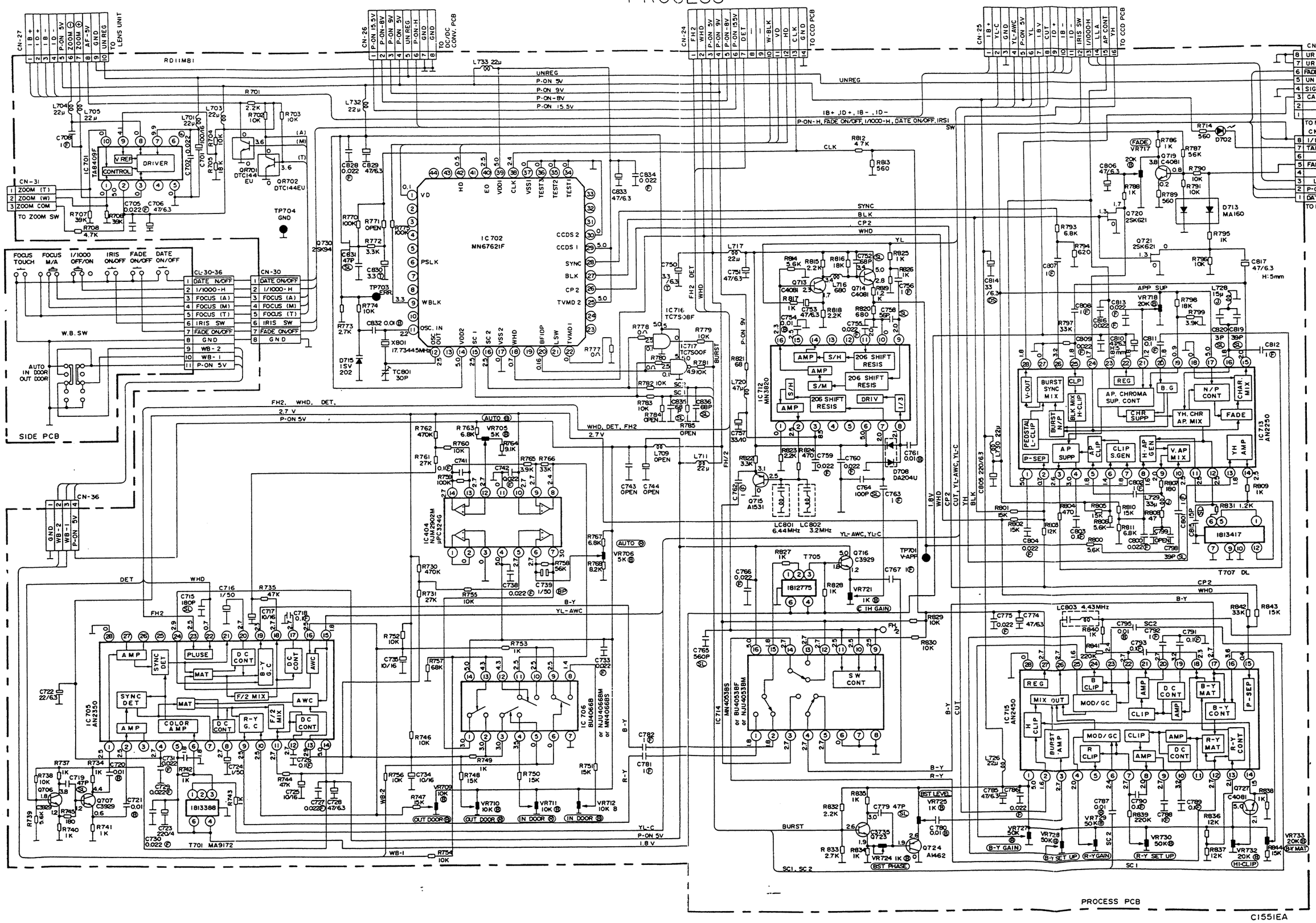

CN-27
CN-26
CN-24
CN-25
CN-23
CN-22
CN-31
CN-30
CN-36
RD11MB1
TO LENS UNIT
TO DC/DC CONV. PCB
TO CCD PCB
TO MAIN PCB
TO ZOOM SW
IC701 TA8409F
IC702 MN67621F
IC703 AN2250
IC704 MN4053BS or BU4053BF or NJU4053BM
IC705 AN2350
IC706 BU4066B or NJU4066BM or MN4066BS
IC712 MN3820
IC713 AN2250
IC714 MN4053BS or BU4053BF or NJU4053BM
IC715 AN2450
IC404 NJM2902M μPC324G
IC716 TC7S08F
IC717 TC7S00F
LC801 6.44MHz
LC802 3.2MHz
LC803 4.43MHz
T701 MA9172
T707 DL
SIDE PCB
PROCESS PCB
C1551EA

PROCESS PCB
(BOTTOM VIEW)

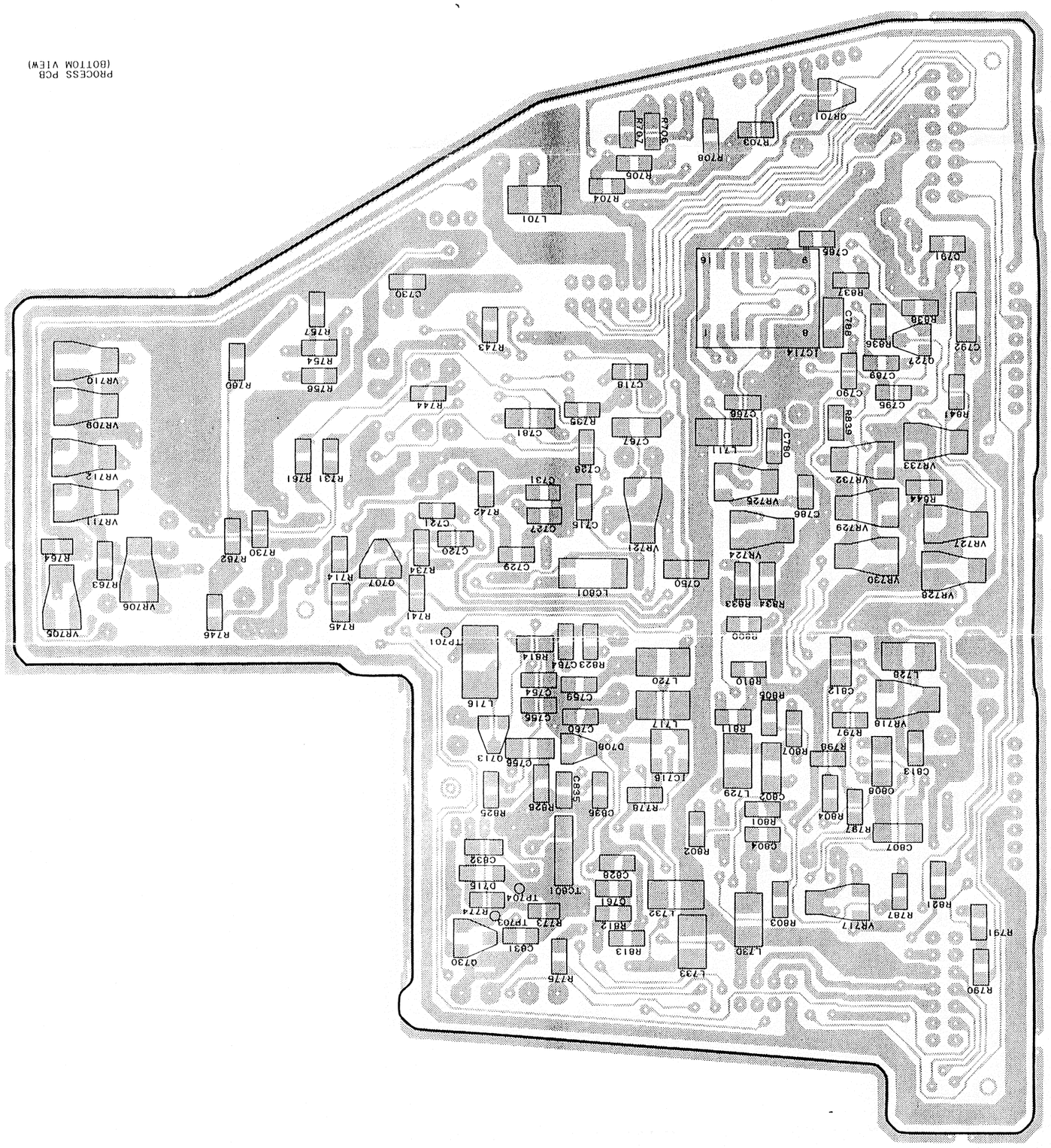

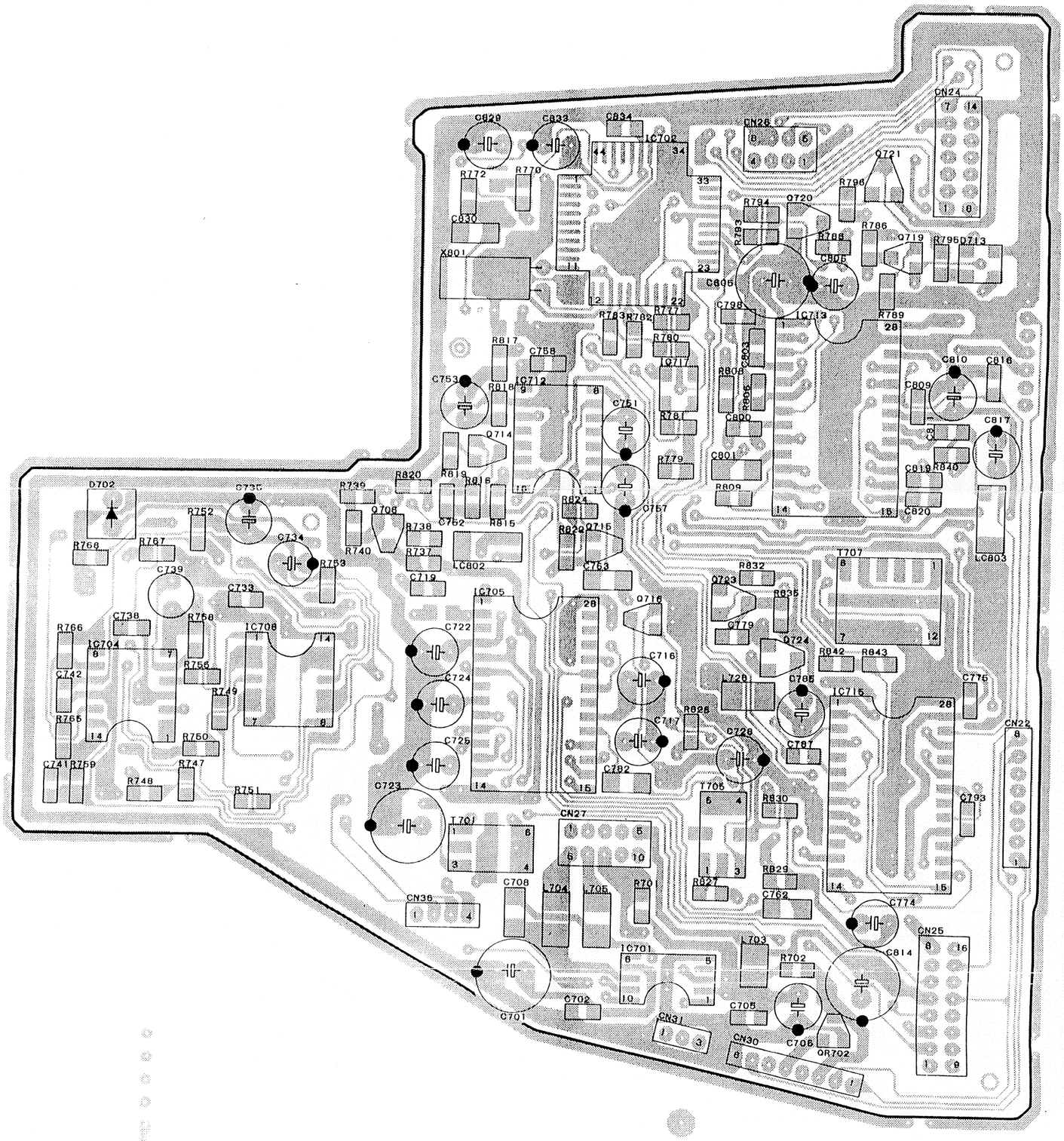

PROCESS
(TOP VI

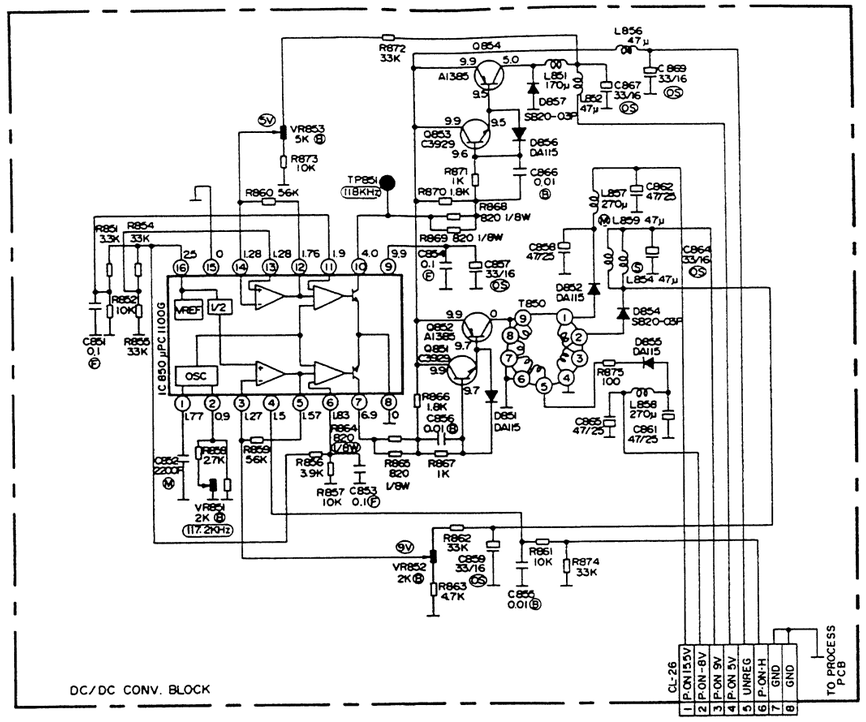
DC/DC CONV. BLOCK
IC 850 μPC1100G
TO PROCESS PCB

CAMERA

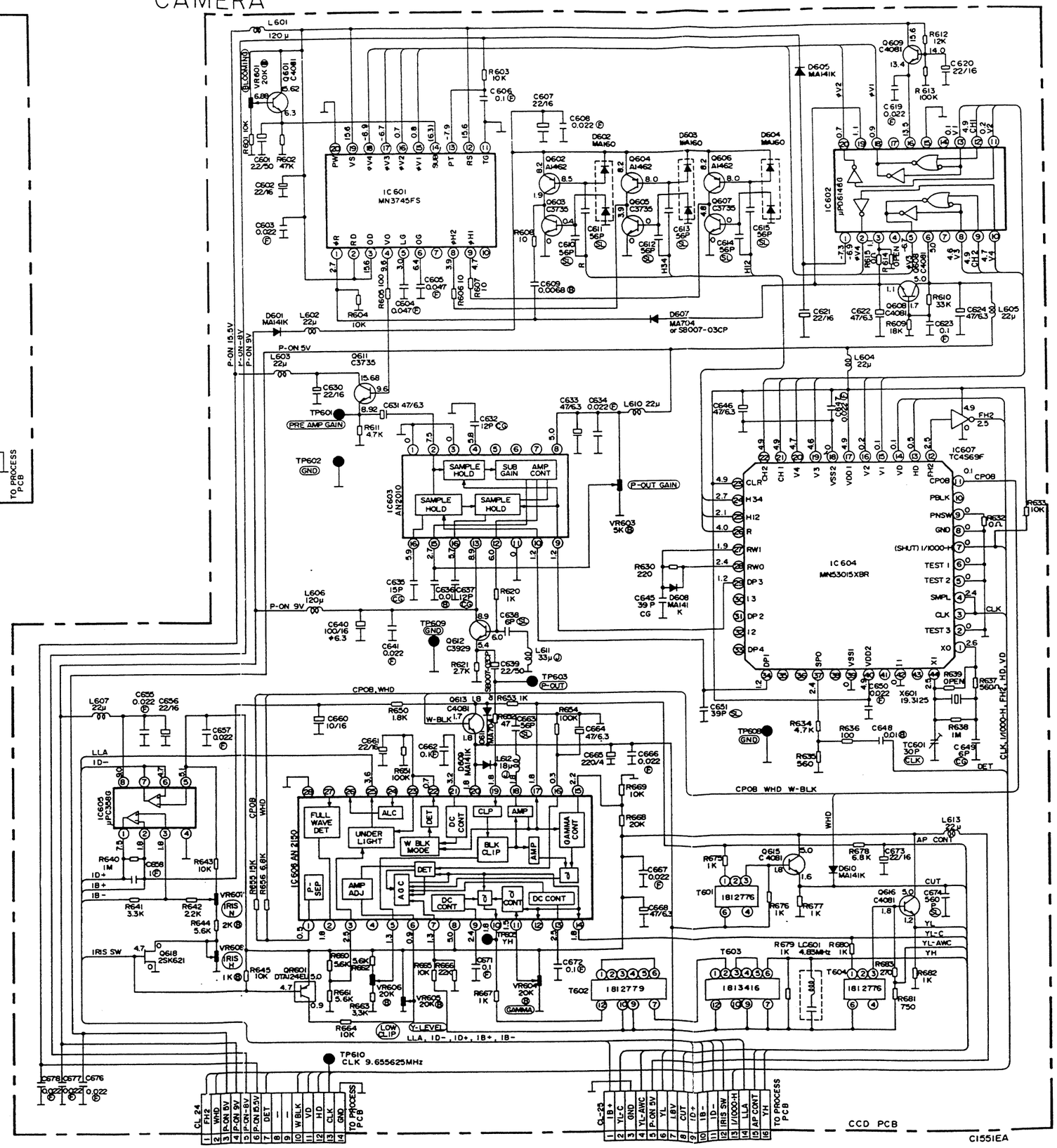
IC 601
MN3745FS
IC 602
μPD6146G
IC 603
AN2010
IC 604
MN53015XBR
IC 605
μPC358G
IC 606 AN 2150
IC607
TC4569F
TP610
CLK 9.655625MHz
CCD PCB
TO PROCESS PCB
C1551EA

CHARGER SCHEMATIC DIAGRAM

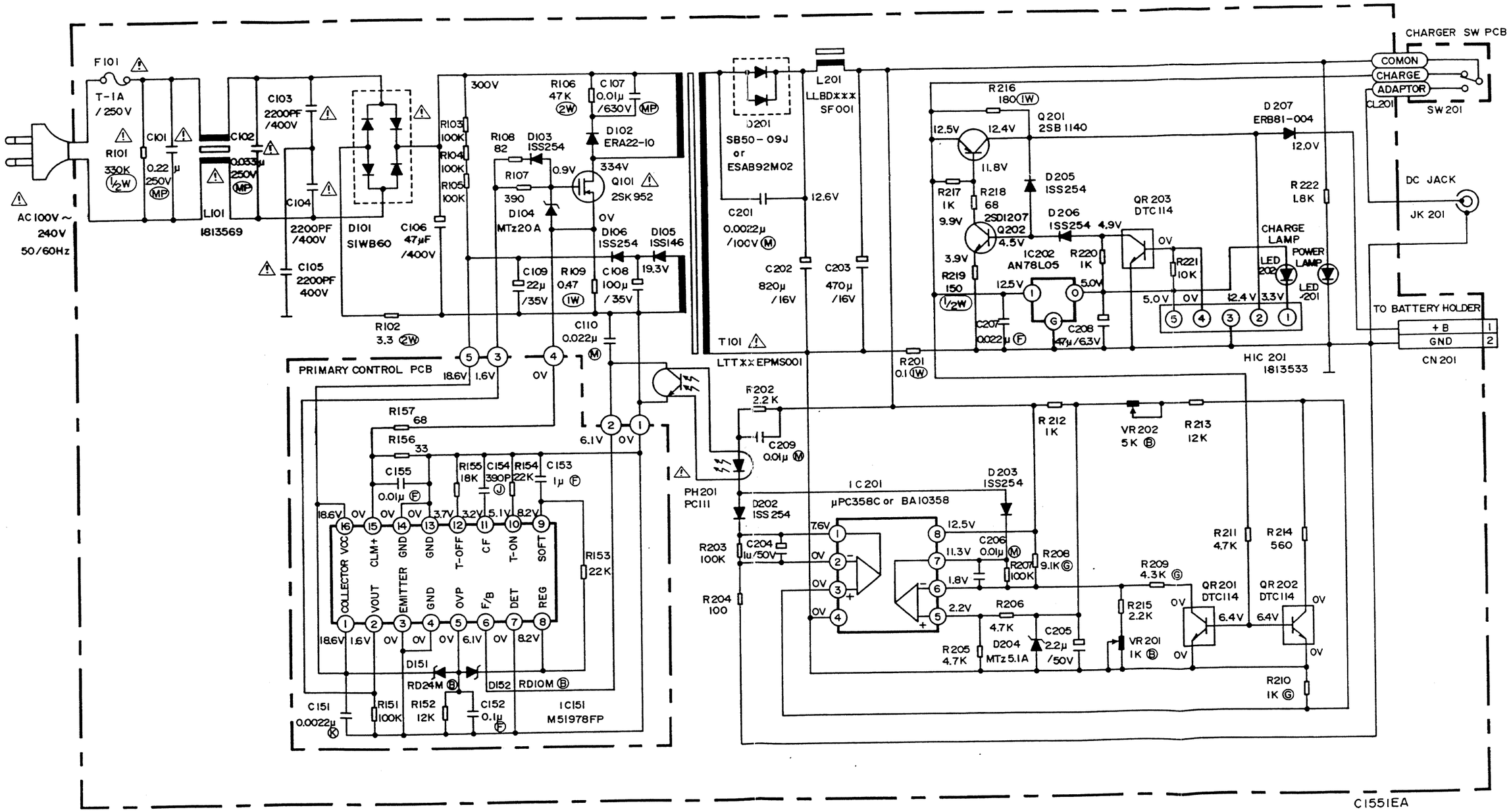

≈ 067.7464

Technische Unterlage

Quelle Technischer Kundendienst 065.219.8

ERSATZTEILLISTE

UNIVERSUM Camcorder VKR 2302

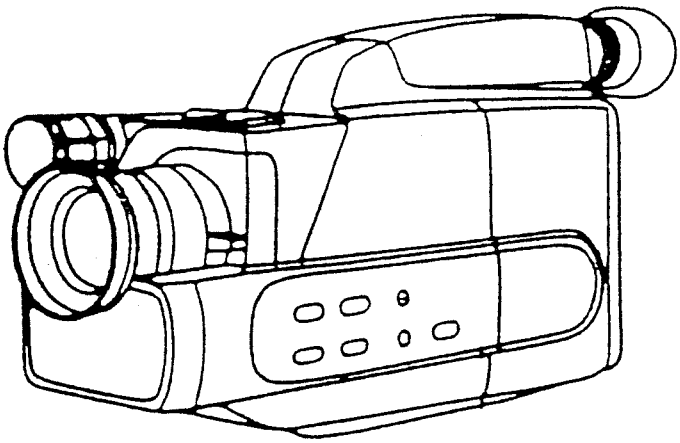

HQ VHS C PAL

00-451/1184

Großversandhaus Quelle, Gustav Schickedanz KG.
Kundendienstzentralleitung Ulmenstraße 52 Nürnberg

Nachdruck nicht gestattet
Änderungen vorbehalten

902 02.90

Bei allen Reparaturen sind die gültigen Sicherheitsvorschriften zu beachten!

CAMCORDER 065.219.8

Zubehör

Netzteil kpl. (Ladegerät)	765 o76.5
NT-Anschlußkabel	765 o81.5
Akku 9,6V (für Ladegerät)	765 o78.1
HF-Modulator	765 o8o.7
AV-Kabel 8Pol.-Movie 2x Chinch	765 o77.3
Tragegurt	765 o79.9
Batterie Knopfcelle Typ CR 2o25	765 641.6

Gehäuseteile

		Position
Gehäuseboden	765 537.6	A-1
Gehäuseseite rechts	765 538.4	A-2
Bedienteilblende	765 539.2	A-3
Gehäuseseite links	765 54o.o	A-4
Griffteil	765 541.8	A-5
Akkufachdeckel	765 542.6	A-6
Objektivdeckel	765 543.4	A-7
Batteriefachdeckel (Knopfcelle)	765 544.2	A-8
Mikrofon (kpl. mit Windschutz)	765 545.9	A-9
Zoomschalter	765 546.7	A-1o
Cassettenfachdeckel	765 547.5	A-11
Sucher kpl.	765 548.3	A-12
Sonnenblende	765 549.1	A-13
Augenmuschel	765 556.6	
Okular	765 555.8	A-12-1
Laufwerk kpl.	765 55o.9	B-1
Schraube M 2x5	765 551.7	L2-1o1-L2-112
Schraube M 2x3	765 552.5	L2-2o1 - L2-4
Schraube M 1,6x6	765 553.3	L2-5o4
Auto-Focus Abdeckung	766 12o.o	

AC-Adapter Netzteil

		Position
Gehäuseoberteil	765 476.7	A-51
Gehäuseboden	765 477.5	A-52
Netzteilplatine	765 478.3	
DC-Buchse	765 479.1	JK 2o1
Photo-koppler	765 48o.9	PH 2o1
Primär - Controll - Platine	765 481.7	
Ladeschalter	765 482.5	

Video - Haupt und Subplatine

Hauptplatine kpl. M.Y/C - Zusatz	765 44o.3	
DC/DC Converter	765 561.6	DC 1
Relais	765 562.4	RY 581
IC-Sicherung	765 563.2	CP 581,582,58
IC-Sicherung	765 564.o	CP 584
Movie-AV Buchse	765 565.7	JK 151
Poti-Tracking	765 566.5	VR 3o3
Knopf Poti-Tracking	765 567.3	
Video Sub Platine	765 568.1	

Driver - PCB Mecha.-Steuerung

Mechanik - Steuerplatine	765 439.5	
Reel - Sensor	765 559.o	SW 592,593
Schalter Aufnahmesperre	765 558.2	SW 591
Sensor, Cassette in	765 56o.8	S 591

Kamera

Kameralock kpl.	765 437.9
CCD - Platine	765 57o.7
IC MN 3745 PS	765 571.5
Objektiv	765 557.4
Signalplatine	765 572.3
DC/DC Converter	765 573.1

Funktionsplatinen

Funktionsplatinen-Einheit alle Kleinplatinen	765 438.7	
DC - Buchse	765 479.1	JK 5o1

Sucher

Monitorplatine	765 569.9

Laufwerk

		Pos.	Seite
Fädelmechanik	765 441.1	1	4
Führungseinheit	765 442.9	97	1
Led-Platine	765 443.7	114	1
Led Infrarot	765 444.5	115	1
Hauptlöschkopf	765 445.2	126	1
Dew Sensor	765 446.o	131	1
Haltewinkel	765 447.8	133	6
Photo Sensor Platine	765 45o.2	136	6
Photo Transistor	765 448.6	134	6
PCB-Phototransistor	765 449.4	135	6
Bandführung S	765 451.o	146	1
Führungsrolle S + T	765 452.8	152	1
Bandführung T	765 453.6	161	1
GA-Rollenhebel	765 454.4	177	3
Kappe f. GA-Rolle	765 455.1	187	3
GA-Rolle	765 456.9	188	3
Audio CTL Kopf	765 457.7	193	3
Fädelmotor (Lademotor)	765 458.5	2o3	3
Riemen f. Fädelmotor	765 459.3	21o	3
Nockenrad	765 461.9	23o	3
Ladezahnradeinheit	765 46o.1	212	3
Mode-Schalter	765 462.7	231	3
Fühlhebel	765 463.5	242	3
Bremsband	765 464.3	257	5
Wickelteller	765 465.o	273	5
Antriebsrad	765 466.8	289	5
Rutschkupplung	765 467.6	3o5	5
Reeleinheit	765 468.4	321	5
Riemen Reel	765 469.2	345	5
Capstan-Motor	765 47o.o	347	5
Kopfradeinheit	765 471.8	353	2
Kopfrad	765 472.6	356	2
Zwischenrad-Einheit	765 473.4	417	5
Bremshebel	765 474.2	443	5
Cassettenschacht kpl.	765 475.9	449	6
Verriegelungshebel	766.253.9		6

VKR2302
C1551EA

Gehäuseteile

Cabinet List

Description	Ref. No.
Lid, Bottom 7655376	A-1
Cabinet, Right " 5384	A-2
Cabinet, Rear " 5392	A-3
Cabinet Ass'y, Left " 5400	A-4X
(Consists of following)	
Cabinet, Left	A-4
Cabinet, Handle Base 7655418	A-5
BAT. Caver, Handle " 5426	A-6
Cap, Lens Hood " 5434	A-7
Cover, Dry BAT. " 5442	A-8
Microphone " 5459	A-9
Switch, Zoom " 5467	A-10
Cover, Cassette 765 5475	A-11
EVF Unit " 5483	A-12
Hood, Lens " 5491	A-13
Accessory Shoe	A-14
Spring Plate, Shoe	A-15
Lavel, Type	A-16
Eye-CAP 7655566	
Ocular 7655558	A-12-1
Deck Ass'y (See Deck List) 7655509	B-1
Bracket, X'tal	B2-1
Bracket, CCD Heat Sink	B2-2
Cushion B, CCD	B2-3
Shield Case, CCD	B2-4
Sub Chassis, Camera	B2-5
Case, Camera Shield	B2-6
Shield Case, DC-DC Pattern Side	B2-7
Shield Case, DC-DC Parts Side	B2-8
Washer, H	B2-9
Insulator, Control D	B2-10
Insulator, Control B	B2-11
Screw, Small, Pan Head M2 X5	L2-101
Screw, Small, Pan Head M2 X5	L2-102
Screw, Small, Pan Head M2 X5	L2-103
Screw, Small, Pan Head M2 X5	L2-104
Screw, Small, Pan Head M2 X5	L2-105
Screw, Small, Pan Head M2 X5	L2-106
Screw, Small, Pan Head M2 X5	L2-107
Screw, Small, Pan Head M2 X5 7655517	L2-108
Screw, Small, Pan Head M2 X5	L2-109
Screw, Small, Pan Head M2 X5	L2-110
Screw, Small, Pan Head M2 X5	L2-111
Screw, Small, Pan Head M2 X5	L2-112

	Description	Ref. No.
	Screw, Small, Pan Head M2 X3	L2-201
	Screw, Small, Pan Head M2 X3 7655525	L2-202
	Screw, Small, Pan Head M2 X5	L2-301
	Screw, Small, Pan Head M2 X5	L2-302
	Screw, Small, Pan Head M2 X5	L2-303
	Screw, Small, Pan Head M2 X5	L2-304
	Screw, Small, Pan Head M2 X5	L2-307
	Screw, Small, Pan Head M2 X5	L2-308
	Screw, Small, Pan Head M2 X5	L2-309
	Screw, Small, Pan Head M2 X5	L2-401
	Screw, Small, Flat Head M1.6 X 6 7655533	L2-501
	Accessory	
	Owner's Manual	
	Battery 7650781	
	Battery Charger Unit (See Charger List) 0765	
	DC Cable " 0815	
	AV Cable " 0773	
	Strap, Shoulder " 0799	

VKR2302
OVSA01937

Video - Haupt + Sub - Platine

2/34

Description		Ref. No.	Parts No.	Q'ty	UNIT PRIC FOBJAP
MCV PCB Ass'y (Consists of Video Main, Video Sub PCB)			OVSA01937		
Video Main PCB (MCV-A) 7654403			1614872A . BX	1	7,838
(Top Side)					
Cap. Ceramic (Chip)	100 pF/50V ± 5% SL	C169, C302	1270101C	2	3
Cap. Ceramic (Chip)	470 pF/50V ± 5% SL	C324	1270471C	1	3
Cap. Ceramic (Chip)	0.001 μF/50V ±10%	C304	12B3102C	1	2
Cap. Ceramic (Chip)	0.0047 μF/50V ±10%	C347	12B3472	1	5
Cap. Ceramic (Chip)	0.01 μF/50V ±10%	C235, C311, C354	12B3103C	3	3
Cap. Ceramic (Chip)	0.015 μF/50V ±10%	C332	12B3153C	1	3
Cap. Ceramic (Chip)	0.022 μF/25V +80/-20%	C165, C167, C507, C535	12F2223C or 12F3223C	4	3
Cap. Ceramic (Chip)	0.022 μF/50V ±10%	C229	12B3223C	1	5
Cap. Ceramic (Chip)	0.047 μF/25V ±10%	C216, C236, C312, C313	72B2473C or 72B3473C	4	7
Cap. Ceramic (Chip)	0.047 μF/50V +80/-20%	C230	12F2473C or 12F3473C	1	5
Cap. Ceramic (Chip)	0.1 μF/25V ±10%	C314, C329	72B2104C or 72B3104C	2	9
Cap. Ceramic (Chip)	1 μF/16V +80/-20%	C210, C303, C529	72F6105C	3	9
Cap. Electrolytic	0.22 μF/50V ±20%	C322	121W224V	1	
Cap. Electrolytic	0.47 μF/50V ±20%	C207	526W474V	1	7
Cap. Electrolytic	1 μF/50V ±20%	C223, C310	526W105V	2	7
Cap. Electrolytic	2.2 μF/50V ±20%	C242, C333, C334	526W225V	3	7
Cap. Electrolytic	4.7 μF/50V ±20%	C212, C213	526W475V	2	7
Cap. Electrolytic	10 μF/16V ±20%	C323	121T106V	1	11
Cap. Electrolytic	10 μF/16V ±20%	C214, C220, C336, C532	526T106V	4	7
Cap. Electrolytic	22 μF/6.3V ±20%	C315, C321	121R226V	2	9
Cap. Electrolytic	22 μF/6.3V ±20% NP	C317	122Z629V	1	16
Cap. Electrolytic	22 μF/16V ±20%	C159, C206, C211, C222	526T226V	4	7
Cap. Electrolytic	33 μF/10V ±20%	C536	526S336V	1	7
Cap. Electrolytic	47 μF/6.3V ±20%	C157, C158, C208, C221, C228, C331, C337	526R476V	7	7
Cap. Electrolytic	47 μF/16V ±20%	C502	526T476V	1	9
Cap. Electrolytic	100 μF/6.3V ±20%	C238, C330, C340, C521, C531	526R107V	5	9
Cap. Electrolytic	100 μF/16V ±20%	C522, C523, C524, C525, C527	526T107V	5	11
Cap. Electrolytic	220 μF/6.3V ±20%	C201, C226	526R227V	2	11
Cap. Electrolytic	470 μF/6.3V ±20%	C156	122Z606	1	12
Cap. Electrolytic (Metal)	0.18 μF/50V ± 5%	C335	122Z312	1	9
Cap. Polypropylene	0.082 μF/100V ± 5%	C234	2231823	1	11
Cap. Tantalum (Chip)	3.3 μF/6.3V ±20%	C534	1223335C	1	19

4/34

Description		Ref. No.	Parts No.	Q'ty	U/R FOB JAPAN
Coil, OSC		T201	1134861	1	99
Coil, Microinductor		L202	1170958	1	10
Coil, Microinductor	56 μH	L581, L582	1170806 or 1178960	2	27
Coil, Microinductor	100 μH	L151, L152, L153, L160, L201	1170982	5	7
Diode, DAN202U		D507	ADAN202UT106	1	9
Diode, DAP202U		D504, D506	ADAP202UT106	2	9
Diode, DA115		D302, D304, D584	ADA115T106**	3	9
Diode, Zener RD10MB		D152, D153, D204, D205	ARD10MT1B***	4	9
Diode, Zener RD6.2M		D508	ARD6R2MT1B3*	1	9
IC, TA7291S	765 5764	IC501	14LW342	1	99
IC, RH5RA52AA-T1	5772	IC581	GRH5RA52AAT1	1	
IC, MN67411 FVCQ	5780	IC301	14DN768	1	544
IC, μPD6145G-101-T1	5798	IC151	14DV731	1	485
IC, μPC75512AG	5806	IC502	14DV774	1	842
IC, BA5114F-T1	5814	IC201	14LF338	1	133
IC, μPC1513G2-T1	5822	IC202	14LV337	1	63
IC, μPC358G2-T1	5830	IC302	14LV364	1	31
Res. Carbon (Chip)	56 ohm 1/10W± 5%	R233	134F560C	1	2
Res. Carbon (Chip)	220 ohm 1/10W± 5%	R208	134F221C	1	2
Res. Carbon (Chip)	330 ohm 1/10W± 5%	R156	134F331C	1	2
Res. Carbon (Chip)	560 ohm 1/10W± 5%	R234	134F561C	1	2
Res. Carbon (Chip)	1k ohm 1/10W± 5%	R216, R306, R307, R554, R555	134F102C	5	2
Res. Carbon (Chip)	1.2k ohm 1/10W± 5%	R213	134F122C	1	2
Res. Carbon (Chip)	1.5k ohm 1/10W± 5%	R219	134F152C	1	2
Res. Carbon (Chip)	2.2k ohm 1/10W± 5%	R335	134F222C	1	2
Res. Carbon (Chip)	2.7k ohm 1/10W± 5%	R537	134F272C	1	2
Res. Carbon (Chip)	3.9k ohm 1/10W± 5%	R312	134F392C	1	2
Res. Carbon (Chip)	4.7k ohm 1/10W± 5%	R540, R541, R542, R582	134F472C	4	2
Res. Carbon (Chip)	5.6k ohm 1/10W± 5%	R212	134F562C	1	2
Res. Carbon (Chip)	6.8k ohm 1/10W± 5%	R230, R502, R503, R514, R527	134F682C	5	2
Res. Carbon (Chip)	8.2k ohm 1/10W± 5%	R218, R333	134F822C	2	2
Res. Carbon (Chip)	10k ohm 1/10W± 5%	R166, R239, R315, R340, R349, R508, R509, R510, R512, R515, R516, R518, R519, R520, R525, R528, R529, R556, R557, R558, R559, R560, R561, R562, R564, R579	134F103C	26	2
Res. Carbon (Chip)	12k ohm 1/10W± 5%	R207	134F123C	1	2

U/P, 34
FOB JAPAN

Description	Ref. No.	Parts No.	Q'ty	
Res. Carbon (Chip) 15k ohm 1/10W± 5%	R563	134F153C	1	2
Res. Carbon (Chip) 22k ohm 1/10W± 5%	R206. R504. R511. R538	134F223C	4	2
Res. Carbon (Chip) 33k ohm 1/10W± 5%	R227	134F333C	1	2
Res. Carbon (Chip) 47k ohm 1/10W± 5%	R531. R532. R534	134F473C	3	2
Res. Carbon (Chip) 68k ohm 1/10W± 5%	R210. R329	134F683C	2	2
Res. Carbon (Chip) 100k ohm 1/10W± 5%	R176. R177. R228. R342. R546	134F104C	5	2
Res. Carbon (Chip) 150k ohm 1/10W± 5%	R309	134F154C	1	2
Res. Carbon (Chip) 330k ohm 1/10W± 5%	R536	134F334C	1	2
Res. Carbon (Chip) 560k ohm 1/10W± 5%	R573	134F564C	1	2
Res. Carbon (Chip) 1M ohm 1/10W± 5%	R222. R302	134F105C	2	2
Transistor, 2SC4081R or 2SC4081S	Q501	QSC4081T106R or QSC4081T106S	1	7
Transistor, 2SA1577Q or 2SA1577R	Q153. Q586	QSA1577T106Q or QSA1577T106R	2	14
Transistor, 2SB709R or 2SB709S	Q507. Q508	Q2SB709RTX## or Q2SB709STX##	2	7
Digital Transistor, DTA114YU	QR507	QTA114YUT106	1	9
Digital Transistor, DTA114EU	QR505	QTA144EUT106	1	9
Digital Transistor, DTC144EU	QR201. QR205. QR508	QTC144EUT106	3	9
X'tal 4.19MHz	X501	1812885	1	24
X'tal 32kHz	X502	1811351	1	34
DC/DC Conv. 765 5616	DC1	1813336	1	765
Keep Relay 5624	RY581	1813335	1	269
IC Protector 5632	CP581. CP582. CP583	579F088Z	3	17
IC Protector 5640	CP584	579F087Z	1	17
Connector, Side 2P	CN1	1740775	1	3
Connector, Side 2P	CN2	1770500	1	3
Connector, Side 3P	CN8	1770501	1	5
Connector, Side 4P	CN28	1770502	1	7
Connector, Side 5P	CN5	1770503	1	7
Connector, Side 6P	CN6	1770504	1	16
Connector, Side 8P	CN4	1770506	1	11
Connector, Side 14P	CN7	1770512	1	21
Connector, Top 6P	CL18	1700624	1	26
Connector, Top 8P	CL22. CL23	1700627	2	53
Connector, Top 12P	CL20	1700626	1	45
Connector, Top 16P	CL19. CL21	1700660	2	31
Connector, Top 16P	CN17	1700607	1	126

C/34

Description		Ref. No.	Parts No.	Q'ty	UNIT PRICE FOB JAPAN
(Bottom Side)					
Cap. Ceramic (Chip)	10 pF/50V ±0.5%	C154	1270100C	1	2
Cap. Ceramic (Chip)	22 pF/50V ± 5%	C506	12CH220C	1	2
Cap. Ceramic (Chip)	27 pF/50V ± 5% CH	C508	12CH270C	1	2
Cap. Ceramic (Chip)	27 pF/50V ± 5%	C153	1270270C	1	2
Cap. Ceramic (Chip)	33 pF/50V ± 5%	C161	1270330C	1	3
Cap. Ceramic (Chip)	56 pF/50V ± 5%	C151	1270560C	1	3
Cap. Ceramic (Chip)	180 pF/50V ± 5%	C152	1270181C	1	3
Cap. Ceramic (Chip)	220 pF/50V ± 5%	C233	1270221C	1	3
Cap. Ceramic (Chip)	470 pF/50V ± 5%	C209	1270471C	1	3
Cap. Ceramic (Chip)	0.0012μF/50V ±10%	C232	12B3122C	1	3
Cap. Ceramic (Chip)	0.0018μF/50V ±10%	C231	12B3182C	1	3
Cap. Ceramic (Chip)	0.0047μF/50V ±10%	C217	12B3472C	1	3
Cap. Ceramic (Chip)	0.0068μF/50V ±10%	C227, C239	12B3682C	2	3
Cap. Ceramic (Chip)	0.01μF/50V ±10%	C205, C309, C319, C328	12B3103C	4	3
Cap. Ceramic (Chip)	0.015μF/50V ±10%	C215	12B3153C	1	4
Cap. Ceramic (Chip)	0.022μF/25V +80/-20%	C155, C168, C202, C503	12F2223C or 12F3223C	4	4
Cap. Ceramic (Chip)	0.047μF/25V +80/-20%	C504, C505	12F2473C or 12F3473C	2	4
Cap. Ceramic (Chip)	0.1μF/25V ±10%	C301, C320	72B2104C or 72B3104C	2	9
Cap. Ceramic (Chip)	0.1μF/50V +80/-20%	C160, C171, C172, C327, C338, C520, C528, C530	12F3104C or 12F2104C	8	4
Cap. Ceramic (Chip)	0.33μF/25V +80/-20%	C203, C225	72F2334C or 72F3334C	2	5
Cap. Ceramic (Chip)	1μF/16V +80/-20%	C218, C219, C224, C519	72F6105C	4	12
Cap. Tantalum (Chip)	2.2μF/6.3V±20%	C526	1223225C	1	17
Cap. Tantalum (Chip)	10μF/4V ±20%	C204	122A106C	1	26
Coil, Microinductor (Chip)	39μH ± 5%	L161	1170737 or 1170751 or 117N706	1	15
Coil, Microinductor (Chip)	47μH ± 5%	L157	1170738 or 1170752 or 117N707	1	15
Coil, Microinductor (Chip)	82μH ± 5%	L155	1170741 or 1170755 or 117N710	1	15
Coil, Microinductor (Chip)	180μH ± 5%	L156	1170793 or 1170790 or 117N787	1	15

Description	Ref. No.	Parts No.	Q'ty	UNIT PRICE FOB JAPAN
Diode, DAN202U	D202, D581, D583	ADAN202UT106	3	9
Diode, DA115	D206, D303, D509	ADA115T106**	3	9
Diode, DA204U	D306	ADA204UT106*	1	9
Diode, MA704	D582	AMA704TX****	1	12
Diode, Zener, RD3.6MB2	D151	ARD3R6MT1B2*	1	9
IC, RH5VA43AA-T1 765 5848	IC583	GRH5VA43AAT1	1	51
IC, Voltage Regulator, 765 5855	IC152	14D0729	1	48
IC, Reset, S80727ANDQT1 765 5863	IC582	G80727ANDQT1 or GRH5VA27AAT1	1	48
Jack, AV CMS5008-0401 765 5657	JK151	1700662	1	83
Res, Carbon (Chip) 0 ohm 1/10W±5%	R155	134F000C	1	2
Res, Carbon (Chip) 2.2 ohm 1/10W±5%	R231	134F229C	1	2
Res, Carbon (Chip) 47 ohm 1/10W±5%	R163, R201, R209	134F470C	3	2
Res, Carbon (Chip) 100 ohm 1/10W±5%	R204, R229, R235	134F101C	3	2
Res, Carbon (Chip) 220 ohm 1/10W±5%	R153, R179, R215	134F221C	3	2
Res, Carbon (Chip) 270 ohm 1/10W±5%	R334	134F271C	1	2
Res, Carbon (Chip) 470 ohm 1/10W±5%	R214	134F471C	1	2
Res, Carbon (Chip) 820 ohm 1/10W±5%	R157, R205	134F821C	2	2
Res, Carbon (Chip) 1k ohm 1/10W±5%	R152, R168, R172, R173, R178, R238, R301, R318, R325, R522, R530	134F102C	11	2
Res, Carbon (Chip) 1.2k ohm 1/10W±5%	R169, R174	134F122C	2	2
Res, Carbon (Chip) 2.2k ohm 1/10W±5%	R159, R165, R224, R237, R501, R586	134F222C	6	2
Res, Carbon (Chip) 2.7k ohm 1/10W±5%	R225	134F272C	1	2
Res, Carbon (Chip) 3.3k ohm 1/10W±5%	R164, R175, R244, R336, R346, R346	134F332C	6	2
Res, Carbon (Chip) 4.7k ohm 1/10W±5%	R154, R162, R170, R247, R316, R543	134F472C	6	2
Res, Carbon (Chip) 5.6k ohm 1/10W±5%	R223, R243	134F562C	2	2
Res, Carbon (Chip) 8.2k ohm 1/10W±5%	R327	134F822C	1	2
Res, Carbon (Chip) 10k ohm 1/10W±2%	R338, R339	134G103C	2	2
Res, Carbon (Chip) 10k ohm 1/10W±5%	R171, R323, R505, R506, R507, R513, R517, R521, R524, R526, R544, R565	134F103C	12	2
Res, Carbon (Chip) 12k ohm 1/10W±5%	R203	134F123C	1	2
Res, Carbon (Chip) 15k ohm 1/10W±5%	R220, R550	134F153C	2	2
Res, Carbon (Chip) 18k ohm 1/10W±5%	R217	134F183C	1	2
Res, Carbon (Chip) 22k ohm 1/10W±5%	R160, R161, R545, R549, R551, R552, R587	134F223C	7	2
Res, Carbon (Chip) 33k ohm 1/10W±5%	R221, R236, R240, R570, R574	134F333C	5	2

8/34

Description	Ref. No.	Parts No.	Q'ty	UNIT PRICE FOB JAPAN
Res. Carbon (Chip) 39k ohm 1/10W±5%	R326	134F393C	1	2
Res. Carbon (Chip) 47k ohm 1/10W±5%	R226. R246. R332. R533. R535. R566. R567. R568. R569. R585	134F473C	10	2
Res. Carbon (Chip) 56k ohm 1/10W±5%	R308. R310. R320. R322	134F563C	4	2
Res. Carbon (Chip) 68k ohm 1/10W±5%	R211. R588	134F683C	2	2
Res. Carbon (Chip) 75k ohm 1/10W±5%	R158	134F750C	1	2
Res. Carbon (Chip) 100k ohm 1/6W ±5%	R250	132A104	1	2
Res. Carbon (Chip) 100k ohm 1/10W±5%	R313. R321. R324. R547. R548. R553	134F104C	6	2
Res. Carbon (Chip) 220k ohm 1/10W±5%	R328. R343	134F224C	2	2
Res. Carbon (Chip) 330k ohm 1/10W±5%	R202	134F334C	1	2
Res. Carbon (Chip) 470k ohm 1/10W±5%	R314. R523	134F474C	2	2
Res. Carbon (Chip) 2.2M ohm 1/10W±5%	R575	134F225C	1	2
Res. Semi-fixed 500 ohm B	VR152	238N263C	1	20
Res. Semi-fixed 2k ohm B	VR151	238N265C	1	20
Res. Semi-fixed 5k ohm B	VR501	238N266C	1	20
Res. Semi-fixed 100k ohm B	VR304	238N270C	1	20
Res. Semi-fixed 500k ohm B	VR302	238N272C	1	20
Res. Semi-fixed 30k ohm B	VR202	238N274C	1	20
Res. Semi-fixed Tracking RK08H110 7655665	VR303	238A414	1	56
Transistor, 2SK621	Q588	Q2SK621TX~~~~	1	15
Transistor, 2SK425T1X17 or 2SK425T1X18	Q589	Q2SK425T1X17 or Q2SK425T1X18	1	29
Transistor, 2SC4098AN or 2SC4098AP or 2SC4098AQ	Q155	QC4098T106AN or QC4098T106AP or QC4098T106AQ	1	7
Transistor, 2SC4081R or 2SC4081S	Q151. Q152. Q156. Q202. Q203. Q502. Q503. Q504. Q585	QSC4081T106R or QSC4081T106R	9	7
Transistor, 2SA1576R or 2SA1576S	Q154	QSA1576T106R or QSA1576T106S	1	7
Transistor, 2SD1766Q or 2SD1766R	Q204	QSD1766T101Q or QSD1766T101R	1	27
Digital Transistor, FMG1	QR584	QFMG1T149~~~~	1	22
Digital Transistor, FMG2	QR302	QFMG2T149~~~~	1	22
Digital Transistor, DTC124EU	QR301. QR303	QTC124EUT106	2	9
Digital Transistor, DTC144EU	QR206. QR207. QR208. QR506	QTC144EUT106	4	9

4/34

Description		Ref. No.	Parts No.	Q'ty	UNIT PRICE FOB JAPAN
Cap. Trimmer (Chip)	30pF	TC151	1280175C	1	43
Knob, TRACKING 7655676			0VM300017	1	10
Braket, AV OUT			0VM400048	1	17
SC, Video Plate			0VM400049	1	12
Video Sub PCB (MCV-B) 7655681			1614872B		
(Top Side)					
Cap. Ceramic (Chip)	18 pF/50V ± 5% SL	C46	1270180C	1	2
Cap. Ceramic (Chip)	22 pF/50V ± 5% SL	C52	1270220C	1	2
Cap. Ceramic (Chip)	56 pF/50V ± 5% SL	C5	1270560C	1	2
Cap. Ceramic (Chip)	100 pF/50V ± 5% SL	C74	1270101C	1	2
Cap. Ceramic (Chip)	220 pF/50V ± 5% SL	C70	1270221C	1	2
Cap. Ceramic (Chip)	390 pF/50V ± 5% SL	C45	1270391C	1	2
Cap. Ceramic (Chip)	0.01μF/25V +80/-20%	C21, C33, C34, C53, C55, C65, C81	12F2103C or 12F3103C	7	2
Cap. Ceramic (Chip)	0.1μF/50V +80/-20%	C22	12F3104C or 12F2104C	1	3
Cap. Ceramic (Chip)	0.022μF/50V +80/-20%	C44	12F3223C or 12F2223C	1	3
Cap. Ceramic (Chip)	0.047μF/50V +80/-20%	C61	12F2473C or 12F3473C	1	3
Cap. Ceramic (Chip)	0.068μF/25V ±10%	C35	72B2683C or 72B3683C	1	9
Cap. Ceramic (Chip)	0.01μF/50V ±10%	C79	12B3103C	1	3
Cap. Ceramic (Chip)	1μF/16V +80/-20%	C11	72F6105C	1	12
Cap. Electrolytic	0.47μF/50V ±20%	C28	526W474V	1	3
Cap. Electrolytic	1μF/50V ±20%	C56, C58, C59, C80	526W105V	4	12
Cap. Electrolytic	2.2μF/50V ±20%	C30	526W225V	1	7
Cap. Electrolytic	4.7μF/50V ±20%	C23	526W475V	1	7
Cap. Electrolytic	10μF/16V ±20%	C27, C31	526T106V	2	7
Cap. Electrolytic	22μF/16V ±20%	C32	526T226V	1	7
Cap. Electrolytic	47μF/6.3V ±20%	C25, C43, C76	526R476V	3	7
Cap. Electrolytic	100μF/16V ±20%	C19	526T107V	1	9
Cap. Electrolytic	220μF/6.3V ±20%	C1	526R227V	1	10
Coil, Microinductor	3.3μH ± 5%	L19	1170964	1	7
Coil, Microinductor	15μH ± 5%	L21	1170972	1	7
Coil, Microinductor	18μH ± 5%	L20	1170973	1	7
Coil, Microinductor	22μH ± 5%	L1, L12	1170974	2	7

Description		Ref. No.	Parts No.	Q'ty	UNIT PRICE FOB JAPAN
Coil, Microinductor	27μH ± 5%	L10	1170975	1	7
Coil, Microinductor	39μH ± 5%	L18	1170977	1	7
Coil, Microinductor	47μH ± 5%	L14	1170978	1	7
Coil, Microinductor	56μH ± 5%	L11	1170979	1	7
Coil, Microinductor	68μH ± 5%	L2, L3	1170980	2	7
Coil, Microinductor	100μH ± 5%	L4, L5, L8	1170982	3	7
Coil, Microinductor	180μH ± 5%	L9	1170985	1	7
Coil, Microinductor	220μH ± 5%	L15, L16	1170986	2	7
Filter,		T2	1813334	1	111
Filter, L.P.F 3MHz		T1	1810805 or 1810994	1	99
Filter, Comb		DL1	1813333 or 1813332	1	238
IC, LA7326M TP-T2	765 587 1	IC1	14DQ775	1	345
IC, LA7330M TP-T2	765 588 9	IC3	14DQ776	1	337
IC, MSM-6965-3MS-K	765 589 7	IC2	14DQ770	1	112
Res. Carbon (Chip)	470 ohm 1/10W ± 5%	R20	134F471C	1	2
Res. Carbon (Chip)	560 ohm 1/10W ± 5%	R43	134F561C	1	2
Res. Carbon (Chip)	820 ohm 1/10W ± 5%	R3	134F821C	1	2
Res. Carbon (Chip)	1k ohm 1/10W ± 5%	R19, R28, R51 R60, R63	134F102C	5	2
Res. Carbon (Chip)	1.2k ohm 1/10W ± 5%	R76	134F122C	1	2
Res. Carbon (Chip)	2.7k ohm 1/10W ± 5%	R40	134F272C	1	2
Res. Carbon (Chip)	3.3k ohm 1/10W ± 5%	R15	134F332C	1	2
Res. Carbon (Chip)	4.7k ohm 1/10W ± 5%	R85	134F472C	1	2
Res. Carbon (Chip)	8.2k ohm 1/10W ± 5%	R81, R84	134F822C	2	2
Res. Carbon (Chip)	220k ohm 1/10W ± 5%	R78	134F224C	1	2
Res. Carbon (Chip)	1M ohm 1/10W ± 5%	R16	134F105C	1	2
Res. Semi-fixed (Chip)	4.7k ohm	VR1, VR2, VR5	238N454C or 238A468C	3	17
Res. Semi-fixed (Chip)	2.2k ohm	VR3	238N452C or 238A466C	1	17
Res. Semi-fixed (Chip)	500 ohm	VR4	238N450C or 238A464C	1	17
Transistor, 2SA1576R or 2SA1576S		Q4	QSA1576T106R or QSA1576T106S	1	7
Transistor, 2SC4081R or 2SC4081S		Q5	QSC4081T106R or QSC4081T106S	1	7
Transistor, 2SC4098AN or 2SC4098AP or 2SC4098AQ		Q10	QC4098T106AN or QC4098T106AP or QC4098T106AQ	1	7

Description		Ref. No.	Parts No.	Q'ty	UNIT PRICE FOB JAPAN
X'tal 4.433619MHz		X1	1811366	1	66
Connecotor, Side 16P		CL17	1700618	1	68
(Bottom Side)					
Cap. Ceramic (Chip)	5 pF/50V ±0.5%	C3	1270509C	1	2
Cap. Ceramic (Chip)	10 pF/50V ±0.5%	C6	1270100C	1	2
Cap. Ceramic (Chip)	18 pF/50V ± 5% SL	C51, C72	1270180C	2	2
Cap. Ceramic (Chip)	22 pF/50V ± 5%	C16, C18, C36	1270222C	3	5
Cap. Ceramic (Chip)	33 pF/50V ± 5%	C12, C49	1270330C	2	2
Cap. Ceramic (Chip)	39 pF/50V ± 5%	C78	1270390C	1	2
Cap. Ceramic (Chip)	68 pF/50V ± 5%	C8	1270680C	1	2
Cap. Ceramic (Chip)	82 pF/50V ± 5%	C15, C17	1270820C	2	2
Cap. Ceramic (Chip)	100 pF/50V ± 5% SL	C69, C71, C77	1270101C	3	2
Cap. Ceramic (Chip)	150 pF/50V ± 5% SL	C13	1270151C	1	2
Cap. Ceramic (Chip)	220 pF/50V ± 5%	C9, C14	1270221C	2	2
Cap. Ceramic (Chip)	390 pF/50V ± 5%	C4	1270391C	1	3
Cap. Ceramic (Chip)	0.01μF/25V +80/-20%	C20, C24, C26, C29, C48, C50, C62, C66, C73, C84, C85, C86	12F2103C or 12F3103C	12	2
Cap. Ceramic (Chip)	0.022μF/25V +80/-20%	C2, C57, C67, C68	12F2223C or 12F3223C	4	2
Cap. Ceramic (Chip)	0.022μF/50V ±10%	C54, C60	12B3223C	2	5
Cap. Ceramic (Chip)	0.47μF/25V -80/-20%	C75	12F2473C or 12F3473C	1	3
Cap. Ceramic (Chip)	1μF/16V +80/-20%	C7, C10	72F6105C	2	3
Diode, DA115		D2, D3	ADA115T106**	2	9
Res. Carbon (Chip)	0 ohm 1/10W ± 5%	R67	134F000C	1	2
Res. Carbon (Chip)	100 ohm 1/10W ± 5%	R26	134F101C	1	2
Res. Carbon (Chip)	1k ohm 1/10W ± 5%	R9, R53, R71	134F102C	3	2
Res. Carbon (Chip)	10k ohm 1/10W ± 5%	R65	134F103C	1	2
Res. Carbon (Chip)	100k ohm 1/10W ± 5%	R77	134F104C	1	2
Res. Carbon (Chip)	1M ohm 1/10W ± 5%	R5, R14	134F105C	2	2
Res. Carbon (Chip)	1.1k ohm 1/10W ± 5%	R7	134F112C	1	2
Res. Carbon (Chip)	1.2k ohm 1/10W ± 5%	R12, R30, R46, R61, R64, R75	134F122C	6	2
Res. Carbon (Chip)	1.5k ohm 1/10W ± 5%	R79	134F152C	1	2
Res. Carbon (Chip)	15k ohm 1/10W ± 5%	R70	134F153C	1	2
Res. Carbon (Chip)	150k ohm 1/10W ± 5%	R23	134F154C	1	2
Res. Carbon (Chip)	1.8k ohm 1/10W ± 5%	R55, R56, R80	134F182C	3	2
Res. Carbon (Chip)	2.2k ohm 1/10W ± 5%	R13, R27, R45, R49, R50, R58, R59, R83	134F222C	8	2

1/34

Description	Ref. No.	Parts No.	Q'ty	UNIT PRICE FOB JAPAN
Res. Carbon (Chip) 22k ohm 1/10W ± 5%	R24. R62. R66. R82	134F223C	4	2
Res. Carbon (Chip) 2.7k ohm 1/10W ± 5%	R1. R10	134F272C	2	2
Res. Carbon (Chip) 3.3k ohm 1/10W ± 5%	R6. R17. R39	134F332C	3	2
Res. Carbon (Chip) 33k ohm 1/10W ± 5%	R21	134F333C	1	2
Res. Carbon (Chip) 390 ohm 1/10W ± 5%	R47. R48	134F391C	2	2
Res. Carbon (Chip) 3.9k ohm 1/10W ± 5%	R68	134F392C	1	2
Res. Carbon (Chip) 39k ohm 1/10W ± 5%	R22. R69	134F393C	2	2
Res. Carbon (Chip) 47 ohm 1/10W ± 5%	R100	134F470C	1	2
Res. Carbon (Chip) 470 ohm 1/10W ± 5%	R52. R57. R73	134F471C	3	2
Res. Carbon (Chip) 4.7k ohm 1/10W ± 5%	R11. R18	134F472C	2	2
Res. Carbon (Chip) 560 ohm 1/10W ± 5%	R2. R72	134F561C	2	2
Res. Carbon (Chip) 5.6k ohm 1/10W ± 5%	R44. R54	134F562C	2	2
Res. Carbon (Chip) 56k ohm 1/10W ± 5%	R25	134F563C	1	2
Res. Carbon (Chip) 680 ohm 1/10W ± 5%	R41	134F681C	1	2
Res. Carbon (Chip) 910 ohm 1/10W ± 5%	R8	134F911C	1	2
Transistor, 2SC4081R or 2SC4081S	Q3. Q8. Q12. Q13. Q15. Q16	QSC4081T106R or QSC4081T106S	6	7
Transistor, 2SC4098AN or 2SC4098AP or 2SC4098AQ	Q2. Q9. Q11	QC4098T106AN or QC4098T106AP or QC4098T106AQ	3	7
Transistor, 2SA1576R or 2SA1576S	Q1. Q14	QSA1576T106R or QSA1576T106S	2	7
Digital Transistor, DTC144EU	QR1. QR2. QR3	QTC144EUT106	3	9

VKR2302
OVDM02718

Driver - PCB
Mecha - Steuerung

15/34

Description		Ref. No.	Parts No.	Q'ty	UNIT PRICE FOB JAPAN
Driver PCB Ass'y Driver PCB	Mechanik-Steuerplatine 7654395		OVSA01935 1614891 X	1	2,589
(Top Side)					
Cap. Ceramic(Chip)	0.01 μF/25V +80/-20%	C592	12F2103C	1	2
Cap. Ceramic(Chip)	0.022μF/25V +80/-20%	C424, C425, C426, C427, C432, C434, C435, C443	12F2223C or 12F3223C	8	3
Cap. Ceramic(Chip)	0.0022μF/50V ±10%	C406, C410, C414, C418	12B3222C	4	2
Cap. Ceramic(Chip)	0.033μF/25V +80/-20%	C470	12F2333C or 12F3333C	1	3
Cap. Ceramic(Chip)	0.033μF/50V ±10%	C381	12B3333C	1	7
Cap. Ceramic(Chip)	0.1μF/25V +80/-20%	C362, C368, C370	12F2104C	3	3
Cap. Ceramic(Chip)	1μF/16V +80/-20%	C405, C408, C409, C413, C416, C417, C421	72F6105C	7	12
Cap. Ceramic(Chip)	33 pF/50V ± 5%	C401, C402, C403, C404	1270330C	4	2
Cap. Electrolytic	1μF/50V ±20%	C454, C455, C456	526W105V	3	7
Cap. Electrolytic	2.2μF/50V ±20% NP	C595	122Z201	1	15
Cap. Electrolytic	10μF/16V ±20%	C361, C367, C382, C436, C593	526T106V	5	7
Cap. Electrolytic	10μF/16V ±20%	C363	121T106V	1	10
Cap. Electrolytic	47μF/6.3V±20%	C439, C440, C442 C468	526R476V	4	9
Cap. Electrolytic	47μF/16V ±20%	C452	526T476V	1	9
Cap. Electrolytic	220μF/6.3V±20%	C591	526R227V	1	10
Cap. Tantal	10μF/16V ±20%	C365, C366	1225106V	2	19
Diode, DA115		D362, D363	ADA115T106**	2	9
Diode, DA204U		D361	ADA204UT106*	1	9
IC, BA6436P	765 5905	IC451	GBA6436P****	1	340
IC, HA11876MP	765 5913	IC401	14LH452	1	247
Res. Carbon(Chip)	10 ohm 1/10W ± 5%	R413	134F100C	1	2
Res. Carbon(Chip)	100 ohm 1/10W ± 5%	R593	134F101C	1	2
Res. Carbon(Chip)	10k ohm 1/10W ± 5%	R381	134F103C	1	2
Res. Carbon(Chip)	100k ohm 1/10W ± 5%	R423	134F104C	1	2
Res. Carbon(Chip)	12k ohm 1/10W ± 5%	R422	134F123C	1	2
Res. Carbon(Chip)	150k ohm 1/10W ± 5%	R596	134F154C	1	2
Res. Carbon(Chip)	2.2 ohm 1/10W ± 5%	R367, R368, R369	134F229C	3	2
Res. Carbon(Chip)	33 ohm 1/10W ± 5%	R451, R452, R453	134F330C	3	2
Res. Carbon(Chip)	33k ohm 1/10W ± 5%	R461	134F333C	1	2

Driver- PCB

14/34

Description	Ref. No.	Parts No.	Q'ty	UNIT PRICE FOB JAPAN
Res. Carbon(Chip) 390 ohm 1/10W ± 5%	R591	134F391C	1	2
Res. Carbon(Chip) 47 ohm 1/10W ± 5%	R594	134F470C	1	2
Res. Carbon(Chip) 470 ohm 1/10W ± 5%	R374	134F471C	1	2
Res. Carbon(Chip) 47k ohm 1/10W ± 5%	R366	134F473C	1	2
Res. Carbon(Chip) 56 ohm 1/10W ± 5%	R372	134F560C	1	2
Res. Carbon(Chip) 33k ohm 1/10W ± 5%				
Res. Carbon(Chip) 33k ohm 1/10W ± 5%				
Transistor, 2SC4081R or 2SC4081S	Q401, Q403, Q405, Q407, Q591	QSC4081T106R or QSC4081T106S	5	9
Digital Transistor, DTA114YU	QR591, QR592	QTA114YUT106	2	9
Connector,	CN15, CN16	1770851	2	3
Connector, Top 2P	CN9, CN10, CN12, CN40	1770500	4	3
Connector, Top 2P	CN11	1770851	1	3
Connector, Top 3P	CN13A	1770501	1	5
Connector, Top 6P	CN18	1700602	1	29
Connector, Top 10P	CN14	1700684	1	43
Connector, Top 12P	CN20	1700605	1	26
Connector, Top 16P	CN19, CN21	1700607	2	126
(Bottom Side)				
Cap. Ceramic(Chip) 180 pF/25V ± 5%	C372	1270181C	1	2
Cap. Ceramic(Chip) 0.01μF/25V +80/-20%	C466, C467, C469	12F2103C or 12F3103C	3	2
Cap. Ceramic(Chip) 0.022μF/25V +80/-20%	C441	12F2223C or 12F3223C	1	2
Cap. Ceramic(Chip) 0.033μF/25V +80/-20%	C459, C462, C464, C471, C472	12F2332C or 12F3333C	5	2
Cap. Ceramic(Chip) 0.033μF/50V ±10%	C373	12B3333C	1	7
Cap. Ceramic(Chip) 0.1μF/25V +80/-20%	C374, C453, C594	12F2104C or 12F3104C	3	3
Cap. Ceramic(Chip) 1μF/16V +80/-20%	C371, C380, C415, C422, C423, C437, C438	72F6105C	7	12
Coil, Microinductor 100 μH	L401, L402, L403, L404	1170728 or 1170633 or 117N608	4	15
Diode, DAP202U	D401, D402	ADAP202UT106	2	9

Other PCB

Description	Ref. No.	Parts No.	Q'ty	UNIT PRICE FOB JAPAN
IC, BA6450F-T1 7655921	IC361	14LF339	1	204
Res. Carbon 0 ohm 1/10W± 5%	R376, R411, R468, R601	134F000C	4	2
Res. Carbon 1.8 ohm 1/10W± 5%	R462, R463, R464, R465	134H189C	4	2
Res. Carbon 2.7 ohm 1/10W± 5%	R361, R362, R363, R364	134H279C	4	2
Res. Carbon 68 ohm 1/10W± 5%	R597, R598, R599, R600	134F680C	4	2
Res. Carbon 150 ohm 1/10W± 5%	R459	134F151C	1	2
Res. Carbon 330 ohm 1/10W± 5%	R414, R415, R416, R417	134F331C	4	2
Res. Carbon 2.7k ohm 1/10W± 5%	R460	134F272C	1	2
Res. Carbon 3.3k ohm 1/10W± 5%	R380, R401, R404, R407, R410	134F332C	5	2
Res. Carbon 8.2k ohm 1/10W± 5%	R418, R419, R420, R421	134F822C	4	2
Res. Carbon 10k ohm 1/10W± 5%	R373, R595	134F103C	2	2
Res. Carbon 39k ohm 1/10W± 5%	R371	134F393C	1	2
Res. Carbon 68k ohm 1/10W± 5%	R370	134F683C	1	2
Res. Carbon 100k ohm 1/10W± 5%	R592	134F104C	1	2
Transistor, 2SC4081R or 2SC4081S	Q361	QSC4081T106R or QSC4081T106S	1	7
Digital Transistor, DTC144EU	QR402, QR404, QR406, QR408	QTC144EUT106	4	9
Switch, Reaf Auto. Sperre 7655582	SW591	1624209	1	32
Sensor Reel GP2S098 5590	S592, S593	1812636	2	60
Sensor, Cassette In 5608	S591	1813342	1	85
Holder, Reel Sensor		6N50243	1	9
Screw, Tapping, M1.4 X 5		MPNGE050	2	2
Screw, Tapping, M1.6 X 4		MPNGG040	1	2
SC;PR.A;Pattern Side		0VM400046	1	9

VKR2302
OVSA01875

Kamera

16/34

	Description		Ref. No.	Parts No.	Q'ty	UNIT PRICE FOB JAPA
	CMV PCV Ass'y (Consists of CCD, Process, DC-DC CONV. PCB)		7654379	OVSA01875	1	24,535
	CCD PCB	7655707		1614870A		
	(Top Side)					
	Cap. Ceramic(Chip)	6 pF/50V ±0.5%	C638	1270609C	1	2
	Cap. Ceramic(Chip)	39 pF/50V ± 5%	C651	12CH390C	1	3
	Cap. Ceramic(Chip)	39 pF/50V ± 5% CH	C645	12CH390C	1	3
	Cap. Ceramic(Chip)	56 pF/50V ± 5%	C663	1270560C	1	2
	Cap. Ceramic(Chip)	560 pF/50V ± 5%	C674	1270561C	1	3
	Cap. Ceramic(Chip)	0.01 μF/50V ±10%	C636	12B3103C	1	3
	Cap. Ceramic(Chip)	0.022μF/50V +80/-20%	C619, C641, C650, C655, C657, C666, C667	12F3223C or 12F2223C	7	3
	Cap. Ceramic(Chip)	0.1μF/50V +80/-20%	C662, C671, C672	12F3104C	3	3
	Cap. Ceramic(Chip)	1μF/16V +80/-20%	C658	72F6105C	1	12
	Cap. Electrolytic	2.2μF/50V ±20%	C601, C639	526W225V	2	7
	Cap. Electrolytic	10μF/16V ±20%	C660	526T106V	1	7
	Cap. Electrolytic	22μF/16V ±20%	C602, C607, C620, C621, C630, C656, C661, C673	526T226V	8	7
	Cap. Electrolytic	47μF/6.3V±20%	C622, C624, C631, C633, C646, C664, C668	526R476V	7	7
	Cap. Electrolytic	100μF/16V ±20%	C640	526T107V	1	10
	Cap. Electrolytic	220μF/6.3V±20%	C665	526R227V	1	10
	Coil, Microinductor (Chip)	18μH ±5%	L612	1170733 or 1170747 or 117N702	1	15
	Coil, Microinductor (Chip)	22μH ±10%	L607, L613	1170626 or 117N601 or 1170720	2	15
	Coil, Microinductor (Chip)	220μH ±10%	L606	1170729 or 1170634 or 117N609	1	15
	Diode, MA141K		D608, D609	AMA141KTX***	2	9
	Filter (Chip), LPF	4.9MHz	T601, T604	1812776T	2	51
	Filter (Chip),	370NS EQF	T602	1812779T	1	102
	Filter (Chip), LPF	4.8MHz	T603	1813416T	1	102
	IC, MN3745FS (PAL), CCD	7655715	IC601	14DN799	1	3,028
	IC, MN53015XBR	" 5954	IC604	14DN527	1	604
	IC, μPD6147G-T1	" 5962	IC602	14DV679	1	425
	IC, AN2150S-T1	" 5970	IC606	14LN361	1	476
	IC, AN2010S-T1	" 5988	IC603	14LN365	1	204
	IC, μPC358G2-T1	" 5996	IC605	14LV364	1	31
	IC, TC4S69F	7656002	IC607	GC4S69FTE85R	1	19

1/34

Description	Ref. No.	Parts No.	Q'ty	UNIT PRICE FOB JAPAN
Res. Carbon (Chip) 0 ohm 1/10W ± 5%	R632	134F000C	1	2
Res. Carbon (Chip) 220 ohm 1/10W ± 5%	R630	134F221C	1	2
Res. Carbon (Chip) 1k ohm 1/10W ± 5%	R620, R667, R676	134F102C	3	2
Res. Carbon (Chip) 2.7k ohm 1/10W ± 5%	R621	134F272C	1	2
Res. Carbon (Chip) 5.6k ohm 1/10W ± 5%	R660, R661	134F562C	2	2
Res. Carbon (Chip) 10k ohm 1/10W ± 5%	R633, R669	134F103C	2	2
Res. Carbon (Chip) 100k ohm 1/10W ± 5%	R651, R654	134F104C	2	2
Res. Carbon (Chip) 1M ohm 1/10W ± 5%	R640	134F105C	1	2
Transistor, 2SC3929R or 2SC3929S or 2SC3929T	Q612	Q2SC3929RTX* or Q2SC3929STX* or Q2SC3929TTX*	1	17
X'tal 19.3125MHz	X601	1811312	1	77
Connector, Top 14P	CL24	1700617	1	31
Connector, Top 16P	CL25	1700618	1	68
Zoom Lens Ass'y 7655574		1813268	1	14.025
Filter, X'tal		1813165 or 1813247 or 1813421	1	1.496
(Bottom Side)				
Cap. Ceramic(Chip) 6 pF/50V ±0.5pF	C649	12CH609C	1	2
Cap. Ceramic(Chip) 12 pF/50V ± 5%	C632, C637	12CH120C	2	2
Cap. Ceramic(Chip) 15 pF/50V ± 5%	C635	12CH150C	1	3
Cap. Ceramic(Chip) 56 pF/50V ± 5%	C610, C611, C612, C613, C614, C615	1270560C	6	3
Cap. Ceramic(Chip) 0.0068μF/50V ±10%	C609	12B3682C	1	3
Cap. Ceramic(Chip) 0.01μF/50V ±10%	C648	12B3103C	1	3
Cap. Ceramic(Chip) 0.022μF/50V +80/-20%	C603, C608, C634, C647, C676, C677, C678	12F3223C or 12F2223C	7	3
Cap. Ceramic(Chip) 0.047μF/25V -80/+20%	C604, C605	[illegible] or 12F2473C	2	3
Cap. Ceramic(Chip) 0.1μF/50V +80/-20%	C606, C623	12F3104C or 12F2104C	2	3
Coil, Microinductor (Chip) 22 μH ±10%	L602, L603, L604, L605, L610	1170720 or 1170626 or 117N601	5	15
Coil, Microinductor (Chip) 33 μH ± 5%	L611	1170736 or 1170750 or 117N705	1	15
Coil, Microinductor (Chip) 120 μH ±10%	L601	1170729 or 1170634 or 117N609	1	15
Diode, MA141K	D601, D605, D610	AMA141KTX***	3	9
Diode, MA160	D602, D603, D604	AMA160TX****	3	14
Diode	D607, D611	AMA704TX**** or ASB00703CPTB	2	12

10/34

Description	Ref. No.	Parts No.	Q'ty	UNIT PRICE FOB JAPAN
Filter, Trap	LC601	1813384	1	41
Res. Carbon (Chip) 0 ohm 1/10W±5%	R615	134F000C	1	2
Res. Carbon (Chip) 10 ohm 1/10W±5%	R606, R607, R608	134F100C	3	2
Res. Carbon (Chip) 47 ohm 1/10W±5%	R652	134F470C	1	2
Res. Carbon (Chip) 100 ohm 1/10W±5%	R605, R636	134F101C	2	2
Res. Carbon (Chip) 270 ohm 1/10W±5%	R683	134F271C	1	2
Res. Carbon (Chip) 560 ohm 1/10W±5%	R635, R637	134F561C	2	2
Res. Carbon (Chip) 750 ohm 1/10W±5%	R681	134F751C	1	2
Res. Carbon (Chip) 1k ohm 1/10W±5%	R653, R675, R677, R679, R680, R682	134F102C	6	2
Res. Carbon (Chip) 1.8k ohm 1/10W±5%	R650	134F182C	1	2
Res. Carbon (Chip) 2.2k ohm 1/10W±5%	R642	134F222C	1	2
Res. Carbon (Chip) 3.3k ohm 1/10W±5%	R641, R663	134F332C	2	2
Res. Carbon (Chip) 4.7k ohm 1/10W±5%	R611, R634	134F472C	2	2
Res. Carbon (Chip) 5.6k ohm 1/10W±5%	R644, R662	134F562C	2	2
Res. Carbon (Chip) 6.8k ohm 1/10W±5%	R656, R678	134F682C	2	2
Res. Carbon (Chip) 10k ohm 1/10W±5%	R601, R603, R604, R643, R645, R664, R665	134F103C	7	2
Res. Carbon (Chip) 12k ohm 1/10W±5%	R612	134F123C	1	2
Res. Carbon (Chip) 15k ohm 1/10W±5%	R655	134F153C	1	2
Res. Carbon (Chip) 18k ohm 1/10W±5%	R609	134F183C	1	2
Res. Carbon (Chip) 20k ohm 1/10W±5%	R668	134F203C	1	2
Res. Carbon (Chip) 22k ohm 1/10W±5%	R666	134F223C	1	2
Res. Carbon (Chip) 33k ohm 1/10W±5%	R610	134F333C	1	2
Res. Carbon (Chip) 47k ohm 1/10W±5%	R602	134F473C	1	2
Res. Carbon (Chip) 100k ohm 1/10W±5%	R613	134F104C	1	2
Res. Carbon (Chip) 1M ohm 1/10W±5%	R638	134F105C	1	2
Res. Semi-fixed (Chip) 1k ohm B	VR608	238N264C	1	20
Res. Semi-fixed (Chip) 2k ohm B	VR607	238N265C	1	20
Res. Semi-fixed (Chip) 5k ohm B	VR603	238N266C	1	20
Res. Semi-fixed (Chip) 20k ohm B	VR601, VR604, VR605, VR606	238N286C	4	20
Transistor, 2SK621	Q618	Q2SK621TX~~xxx~~	1	15
Transistor, 2SC4081R or 2SC4081S	Q601, Q608, Q609, Q613, Q615, Q616	QSC4081T106R or QSC4081T106S	6	7
Transistor, 2SC3735B34 or 2SC3735B35	Q603, Q605, Q607, Q611	QSC3735T1B34 or QSC3735T1B35	4	20
Transistor, 2SA1462Y33 or 2SA1462Y34	Q602, Q604, Q606	QSA1462T1Y33 or QSA1462T1Y34	3	20
Digital Transistor, DTA124EU	QR601	QTA124EU106	1	9
Trimmer (Chip) 30pF	TC601	1280175C	1	43

11/34

UNIT PRICE FOB JAPAN

	Description	Ref. No.	Parts No.	Q'ty	
✓	Process PCB 7655723		1614870B		
	(Top Side)				
	Cap. Ceramic (Chip) 3 pF/50V ±0.5pF	C820	1270309C	1	2
	Cap. Ceramic (Chip) 39 pF/50V ± 5%	C798. C819	1270390C	2	3
	Cap. Ceramic (Chip) 47 pF/50V ± 5%	C719. C779	1270470C	2	3
	Cap. Ceramic (Chip) 56 pF/50V ± 5%	C758	1270560C	1	3
	Cap. Ceramic (Chip) 68 pF/50V ± 5%	C752	1270680C	1	3
	Cap. Ceramic (Chip) 0.01μF/50V ± 5%	C787	12B3103C	1	3
	Cap. Ceramic (Chip) 0.022μF/50V +80/-20%	C702. C705. C733. C738. C742. C775. C800. C809. C816. C834	12F3223C or 12F2223C	10	3
	Cap. Ceramic (Chip) 0.1μF/50V +80/-20%	C741. C793. C803. C811	12F3104C or 12F2104C	4	3
	Cap. Ceramic (Chip) 1μF/16V +80/-20%	C708. C762. C763. C782. C801	72F6105C	5	12
	Cap. Electrolytic 1μF/50V ±20% NP	C739	524X105V	1	7
	Cap. Electrolytic 1μF/50V ±20%	C716. C724	526W105V	2	7
	Cap. Electrolytic 10μF/16V ±20%	C717. C725. C734. C735	526T106V	4	7
	Cap. Electrolytic 22μF/6.3V±20%	C722	121R226V	1	9
	Cap. Electrolytic 33μF/10V ±20%	C757	526S336V	1	7
	Cap. Electrolytic 33μF/16V ±10% OS	C814	122Z203V	1	7
	Cap. Electrolytic 47μF/6.3V±20%	C810. C817.	121R476V	2	10
	Cap. Electrolytic 47μF/6.3V±20%	C706. C728. C751. C753. C774. C785. C806. C829. C833	526R476V	9	10
	Cap. Electrolytic 100μF/16V ±20%	C701	526T107V	1	10
	Cap. Electrolytic 220μF/6.3V±20%	C723. C805	526R227V	2	10
	Cap. Tantalum (Chip) 3.3μF/6.3V±20%	C830	1223335C	1	10
	Coil, Microinductor (Chip) 22μH ±10%	L703. L704. L705. L726	1170720 or 1170626 or 117N601	4	15
	Diode, MA160	D713	AMA160TX~~xxxx~~	1	14
	LED SLA-592LT129F	D702	1401436	1	31
	Filter(Chip), BPF 4.8MHz	T701	1813388	1	51
	Filter(Chip), 150NS DLF	T707	1813417	1	102
	Filter(Chip), LPF 4.8MHz	T705	1812775	1	51
	Filter, Trap	LC802	1813385	1	41
	Filter, Trap	LC803	1813386	1	41

20/34

Description		Ref. No.	Parts No.	Q'ty	UNIT PRIC FCB JAPA
IC, MN3820S-T1	765 601 0	IC712	14DN526	1	417
IC, MN67621F	" 6028	IC702	14DN674	1	578
IC, TC7S00F	" 6036	IC717	14DW809	1	19
IC, AN2450S-T1	" 6044	IC715	14LN360	1	425
IC, AN2350S-T1	" 6051	IC705	14LN362	1	425
IC, AN2250S-T1	" 6069	IC713	14LN363	1	425
IC, TA8409F	" 6077	IC701	14LW458	1	116
IC, NJU4066BM-T1	" 6085	IC706	14DO671 or	1	32
IC, NJM2902M or μPC324G2	" 6093	IC704	14DF777 or 14DN672 14LO449 or 14DV448	1	39
Res. Carbon (Chip)	1k ohm 1/10W ±5%	R737, R740, R749, R753, R786, R788, R795, R809, R817, R827, R828, R835, R840	134F102C	13	39
Res. Carbon (Chip)	0 ohm 1/10W ±5%	R777, R780	134F000C	2	2
Res. Carbon (Chip)	10k ohm 1/10W ±5%	R702, R738, R752, R755, R779, R781, R782, R783, R796, R829, R830	134F103C	10	2
Res. Carbon (Chip)	100k ohm 1/10W ±5%	R759, R770	134F104C	2	2
Res. Carbon (Chip)	15k ohm 1/10W ±5%	R747, R748, R750, R751, R843	134F153C	5	2
Res. Carbon (Chip)	18k ohm 1/10W ±5%	R816	134F183C	1	2
Res. Carbon (Chip)	2.2k ohm 1/10W ±5%	R701, R815, R818, R819, R832	134F222C	5	2
Res. Carbon (Chip)	3.3k ohm 1/10W ±5%	R772, R822	134F332C	2	2
Res. Carbon (Chip)	33k ohm 1/10W ±5%	R766, R842	134F333C	2	2
Res. Carbon (Chip)	3.9k ohm 1/10W ±5%	R765	134F392C	1	2
Res. Carbon (Chip)	47 ohm 1/10W ±5%	R808	134F470C	1	2
Res. Carbon (Chip)	470 ohm 1/10W ±5%	R824	134F471C	1	2
Res. Carbon (Chip)	560 ohm 1/10W ±5%	R789	134F561C	1	2
Res. Carbon (Chip)	5.6k ohm 1/10W ±5%	R739, R806	134F562C	2	2
Res. Carbon (Chip)	.56k ohm 1/10W ±5%	R758	134F563C	1	2
Res. Carbon (Chip)	620 ohm 1/10W ±5%	R794	134F621C	1	2
Res. Carbon (Chip)	680 ohm 1/10W ±5%	R820	134F681C	1	2
Res. Carbon (Chip)	6.8k ohm 1/10W ±5%	R767, R793	134F682C	2	2
Res. Carbon (Chip)	8.2k ohm 1/10W ±5%	R768	134F822C	1	2
Transistor, 2SK621		Q720, Q721	Q2SK621TX***	2	15
Transistor, 2SC3929R or 2SC3929S or 2SC3929T		Q706, Q716	Q2SC3929RTX* or Q2SC3929STX* or Q2SC3929TTX*	2	17
Transistor, 2SC4081R or 2SC4081S		Q714, Q719	QSC4081T106R or QSC4081T106S	2	7

21/34

Description	Ref. No.	Parts No.	Q'ty	UNIT PRICE FOB JAPAN
Transistor, 2SA1531S or 2SA1531T	Q715	Q2SA1531STX* or Q2SA1531TTX*	1	17
Transistor, 2SC3735B33 or 2SC3735B34 or 2SC3735B35	Q723	QSC3735T1B33 or QSC3735T1B34 or QSC3735T1B35	1	20
Transistor, 2SA1462Y33 or 2SA1462Y34	Q724	QSA1462T1Y33 or QSA1462T1Y34	1	20
Digital Transistor, DTC144EU	QR702	QTC144EUT106	2	9
X'tal 17.7345MHz	X801	1811365	1	87
Connector,	CN31	5700046	1	5
Connector, Top 4P	CN36	1770488	1	5
Connector, Top 8P	CN26	1700603	1	17
Connector, Top 8P	CN30	1770492	1	10
Connector, Top 8P	CN22, CN23	1700658	2	26
Connector, Top 10P	CN27	1700604	1	20
Connector, Top 14P	CN24	1700606	1	29
Connector, Top 16P	CN25	1700607	1	126
Bracket, LED		0VM400055	1	20
(Bottom Side)				
Cap. Ceramic(Chip) 47 pF/50V ± 5%	C831	1270470C	1	3
Cap. Ceramic(Chip) 68 pF/50V ± 5%	C835, C836	1270680C	2	3
Cap. Ceramic(Chip) 100 pF/50V ± 5%	C764	1270101C	1	3
Cap. Ceramic(Chip) 180 pF/50V ± 5%	C715	1270181C	1	3
Cap. Ceramic(Chip) 560 pF/50V ± 5%	C765	1270561C	1	3
Cap. Ceramic(Chip) 0.01μF/50V ±10%	C720, C721, C754, [illegible], C832	12B3103C	7	3
Cap. Ceramic(Chip) 0.022μF/50V +80/-20%	C727, C729, C730, C731, C755, C759, C760, C766, C786, C804, C813, C828	12F3223C or 12F2223C	12	3
Cap. Ceramic(Chip) 0.1μF/25V -80/-20%	C718, C726, C789, C790, C791	12F2104C or 12F3104C	5	3
Cap. Ceramic(Chip) 1μF/16V +80/-20%	C756, C767, C781, C788, C792, C802, C807, C808, C812	72F6105C	9	12
Cap. Tantalum 3.3μF/6.3V±20%	C750	1223335C	1	19
Coil, Microinductor (Chip) 15μH ± 5%	L728	1170732 or 1170746 or 117N701	1	15
Coil, Microinductor (Chip) 22μH ± 5%	L701, L711, L717, L730, L732, L733	1170720 or 1170626 or 117N601	6	15

Description	Ref. No.	Parts No.	Q'ty	UNIT PRIC FOB JAPAN
Coil, Microinductor (Chip) 33μH ± 5%	L729	1170736 or 1170750 or 117N705	1	15
Coil, Microinductor (Chip) 47μH ± 5%	L720	1170724 or 1170630 or 117N605	1	15
Coil, Microinductor (Chip) 680μH ± 5%	L716	1170774 or 1170642 or 117N617	1	15
Diode, DA204U	D708	ADA204UT106*	1	9
Diod	D715	A1SV20217TRC	1	9
Filter, Trap	LC801	1813387	1	41
IC, MN4053BST1 765 610 1	IC714	14DN532 or 14DO574 or 14DF548	1	39
IC, TC7S08F 765 611 9	IC716	14DW810	1	19
Res, Carbon (Chip) 0 ohm 1/10W ±5%	R778	134F000C	1	2
Res, Carbon (Chip) 68 ohm 1/10W ±5%	R821	134F680C	1	2
Res, Carbon (Chip) 180 ohm 1/10W ±5%	R745, R807	134F181C	2	2
Res, Carbon (Chip) 470 ohm 1/10W ±5%	R804	134F471C	1	2
Res, Carbon (Chip) 560 ohm 1/10W ±5%	R714, R813	134F561C	2	2
Res, Carbon (Chip) 1k ohm 1/10W ±5%	R734, R741, R742, R743, R825, R826, R824, R823	134F102C	8	2
Res, Carbon (Chip) 2.2k ohm 1/10W ±5%	R823	134F222C	1	2
Res, Carbon (Chip) 2.7k ohm 1/10W ±5%	R773, R833	134F272C	2	2
Res, Carbon (Chip) 3.9k ohm 1/10W ±5%	R799	134F392C	1	2
Res, Carbon (Chip) 4.7k ohm 1/10W ±5%	R708, R812	134F472C	2	2
Res, Carbon (Chip) 5.6k ohm 1/10W ±5%	R800, R814	134F562C	2	2
Res, Carbon (Chip) 6.8k ohm 1/10W ±5%	R763, R811	134F682C	1	2
Res, Carbon (Chip) 9.1k ohm 1/10W ±5%	R764	134F912C	1	2
Res, Carbon (Chip) 10k ohm 1/10W ±5%	R703, R704, R746, R754, R756, R760, R774, R790, R791	134F103C	9	2
Res, Carbon (Chip) 12k ohm 1/10W ±5%	R803, R836, R837	134F123C	3	2
Res, Carbon (Chip) 15k ohm 1/10W ±5%	R801, R802, R805, R810, R844	134F153C	5	2
Res, Carbon (Chip) 18k ohm 1/10W ±5%	R798	134F183C	1	2
Res, Carbon (Chip) 27k ohm 1/10W ±5%	R731, R761	134F273C	2	2
Res, Carbon (Chip) 39k ohm 1/10W ±5%	R706, R707	134F393C	2	2
Res, Carbon (Chip) 43k ohm 1/10W ±5%	R797	134F433C	1	2
Res, Carbon (Chip) 47k ohm 1/10W ±5%	R705, R735, R744	134F473C	3	2
Res, Carbon (Chip) 56k ohm 1/10W ±5%	R787	134F563C	1	2
Res, Carbon (Chip) 68k ohm 1/10W ±5%	R757	134F683C	1	2
Res, Carbon (Chip) 100k ohm 1/10W ±5%	R775	134F104C	1	2

23/34

Description	Ref. No.	Parts No.	Q'ty	UNIT PRICE FOB JAPAN
Res. Carbon (Chip) 220k ohm 1/10W ±5%	R839, R841	134F224C	2	2
Res. Carbon (Chip) 470k ohm 1/10W ±5%	R730, R762	134F474C	2	2
Res. Semi-fixed (Chip) 1k ohm B	VR721, VR724, VR725	238N264C	3	20
Res. Semi-fixed (Chip) 5k ohm B	VR705, VR706	238N266C	2	20
Res. Semi-fixed (Chip) 10k ohm B	VR709, VR710, VR711, VR712	238N267C	4	20
Res. Semi-fixed (Chip) 20k ohm B	VR717, VR718, VR732, VR733	238N268C	4	20
Res. Semi-fixed (Chip) 50k ohm B	VR727, VR728, VR729, VR730	238N269C	4	20
Transistor, 2SC3929R or 2SC3929S or 2SC3929T	Q707	Q2SC3929RTX* or Q2SC3929STX* or Q2SC3929TTX*	1	17
Transistor, 2SC4081R or 2SC4081S	Q713, Q727	QSC4081T106R or QSC4081T106S	2	7
Transistor, 2SK94X1 or 2SK94X2	Q730	Q2SK94T1X1** or Q2SL94T1X2**	1	26
Digital Transistor, DTC144EU	QR701	QTC144EUT106	1	9
Trimmer Cap. 30pF	TC801	1280175C	1	43
DC/DC CONV. PCB 765 5731		1614870C		
(Top Side) keine ET				
Cap. Ceramic (Chip) 0.01μF/50V ±10%	C855, C856	12B3103C	2	3
Cap. Ceramic (Chip) 0.1μF/25V +80/-20%	C853, C854	12F2104C or 12F3104C	2	3
Cap. Electrolytic 33μF/16V ±10% OS	C857, C859, C864, C867, C869	122Z203V	5	7
Cap. Electrolytic 47μF/25V ±20%	C858, C861, C862, C865	526U476V	4	10
Cap. Polyester Film 2200μF/50V ± 5%	C852	2254222	1	5
Coil, Microinductor 47μH	L852, L856, L859	117D583 or 117B681	3	34

Description	Ref. No.	Parts No.	Q'ty	UNIT PRICE FOB JAPAN
Coil, Microinductor 170μH	L851	117D593 or 117B682	1	37
Diode, DA115	D851	ADA115T106**	1	9
IC, μPC1100G-T1	IC850	14LV359	1	170
Res. Carbon (Chip) 820 ohm 1/ 8W± 5%	R864, R865	134H821C	2	2
Res. Carbon (Chip) 1k ohm 1/10W± 5%	R867	134F102C	1	2
Res. Carbon (Chip) 1.8k ohm 1/10W± 5%	R866	134F182C	1	2
Res. Carbon (Chip) 2.7k ohm 1/10W± 5%	R858	134F272C	1	2
Res. Carbon (Chip) 10k ohm 1/10W± 5%	R853, R861	134F103C	2	2
Res. Carbon (Chip) 33k ohm 1/10W± 5%	R855, R874	134F333C	2	2
Res. Carbon (Chip) 56k ohm 1/10W± 5%	R859	134F563C	1	2
Transistor, 2SA1385L or 2SA1385K	Q852, Q854	A1385L or A1385K	2	54
Transistor, 2SC3929R ro 2SC3929S or 2SC3929T	Q851	Q2SC3929RTX* or Q2SC3929STX* or Q2SC3929TTX*	1	17
Trans, DC-DC	T850	115B914 or [illegible]	1	63
Connector, Side 8P	CL26	1700614	1	19
(Bottom Side)				
Cap. Ceramic (Chip) 0.01μF/50V ±10%	C866	12B3103C	1	3
Cap. Ceramic (Chip) 0.1μF/50V +80/-20%	C851	12F3104C or 12F2104C	1	3
Coil, Microinductor (Chip) 270μH ±10%	L857, L858	1170770 or 1170638 or 117N613	2	17
Diode, DA115	D852, D855, D856	ADA115T106**	3	9
Diode	D854, D857	ASB2003PTD**	2	32

	Description	Ref. No.	Parts No.	Q'ty	UNIT PRICE FOB JAPAN
	Res. Carbon(Chip) 100 ohm 1/10W±5%	R875	134F101C	1	2
	Res. Carbon(Chip) 820 ohm 1/ 8W±5%	R868, R369	134H821C	2	3
	Res. Carbon(Chip) 1k ohm 1/10W±5%	R871	134F102C	1	2
	Res. Carbon(Chip) 1.8k ohm 1/10W±5%	R870	134F182C	1	2
	Res. Carbon(Chip) 3.3k ohm 1/10W±5%	R851	134F332C	1	2
	Res. Carbon(Chip) 3.9k ohm 1/10W±5%	R856	134F392C	1	2
	Res. Carbon(Chip) 4.7k ohm 1/10W±5%	R863	134F472C	1	2
	Res. Carbon(Chip) 10k ohm 1/10W±5%	R852, R857, R873	134F103C	3	2
	Res. Carbon(Chip) 33k ohm 1/10W±5%	R854, R862, R872	134F333C	3	2
	Res. Carbon(Chip) 56k ohm 1/10W±5%	R860	134F563C	1	2
	Res. Semi-fixed(Chip) 2k ohm B	VR851, VR852,	238N265C	2	20
	Res. Semi-fixed(Chip) 5k ohm B	VR853	238N266C	1	20
	Transistor, 2SC3929R or 2SC3929S	Q853	Q2SC3929RT** or Q2SC3929ST**	1	17

VKR2302
OVSA01933

Funktionsplatinen

26/34

	Description	Ref. No.	Parts No.	Q'ty	UNIT PRICE FOB JAPAN
	Control PCB Ass'y Control PCB (Consists of Rear, Side, Trigger, Power, Joint PCB) 7654387		OVSA01933 1614873	1	567
	(Top Side)				
	Diode, EK-14	D587	AEK14xxxxxx	1	32
	LED SLN-210VC74	D585	ESLON210VC74x	1	17
	Jack, DC 7654791	JK501	1631083	1	22
	Switch, Push	SW586	1621837	1	22
	Switch, Slide	SW585, SW595, SW586	1621820	3	20
	Switch, Push	SW591, SW592, SW593, SW594	1621838	4	12
	Switch, Push	SW587	1621840	1	20
	Switch, Slide	SW597	1621819	1	24
	Connector	CN3	1700632	1	17
	Connector	CL3	1700645	1	14
	Connector, Top 3P	CN33	1770487	1	5
	Connector, Top 6P	CN29	1770504	1	15
	Terminal (-)		OVM400041	1	19
	Terminal (-)		OVM400042	1	17
	Terminal BAT		OVM400043	1	22
⚠	Fuse T3.15A/250V	F501	1790486	1	20
	Diode, 1SS254	D572, D573, D574, D575, D576, D577, D578, D579, D580, D591, D592, D593	A1SS254T77xx	12	2
	Res. Carbon 330 ohm 1/10W ± 5%	R571	1324331T	1	2
	Switch, Push	SW572, SW573, SW574, SW575, SW576, SW577, SW578, SW579, SW580, SW581, SW582, SW583, SW584	1621836Y	13	10
	Holder, Fuse		5790119Y	1	5

VKR2302
EVF01

Sucher

1/34

Description		Ref. No.	Parts No.	Q'ty
EVF PCB Ass'y 7655699			EVF01X	1
EVF PCB			BC1550F01001	1/6
Cap. Ceramic	120 pF/1kV	C265	122Z586U	1
Cap. Ceramic	330 pF/500V	C266	122Z587U	1
Cap. Electrolytic	0.47μF/50V	C259	526W475S	1
Cap. Electrolytic	1μF/50V	C251, C253	121W105S	2
Cap. Electrolytic	10μF/16V	C262	526T106S	1
Cap. Electrolytic	22μF/16V	C256	526T226S	1
Cap. Electrolytic	100μF/6.3V	C263	122Z638S	1
Cap. Electrolytic	100μF/6.3V	C260, C261	526R107S	2
Cap. Electrolytic(Chip)	100 pF/ SL	C257	1270101C	1
Cap. Electrolytic(Chip)	0.0027μF/	C252	72CG272C	1
Cap. Electrolytic(Chip)	0.047μF/	C267, C268	12F2473C or 12F3473C	2
Cap. Electrolytic(Chip)	0.1μF/	C269	12F2104C	1
Cap. Tantalum	100μF/7V	C254	1223107S	1
Cap. Polyester Film	2700 pF/100V	C264	122Z600S	1
Cap. Polyester Film	0.1μF/50V	C255	122Z588S	1
Cap. Polyester Film	0.1μF/50V	C258	122Z588U	1
Diode, ERA91-02-BPR-B		D252	AERA9102BPRB	1
Diode, ERA34-10-BPR-B		D253	AERA3410BPRB	1
Diode, DA112		D254	ADA112T106**	1
Diode, DA116		D251	ADA116T146**	1
Coil, Microinductor	100μH	L251	1170950S	1
Coil, Degaussing		L253	117N803	1
Coil, Microinductor	1μH	L252	1170996 or 1170997 or 117N605	1
IC, BA7145F 7656127		IC251	GBA7145FT1**	1
Res. Carbon (Chip)	0 ohm 1/8W ±5%	J251, J252, J253	134H000C	3
Res. Carbon (Chip)	0 ohm 1/10W±5%	J256, J254, J255	134F000C	3
Res. Carbon (Chip)	0 ohm 1/10W±5%	R261	134F102C	1
Res. Carbon (Chip)	3.9 ohm 1/10W±5%	R257	134F399C	1
Res. Carbon (Chip)	4.7 ohm 1/10W±5%	R269	134F479C	1
Res. Carbon (Chip)	470 ohm 1/10W±5%	R254, R270	134F471C	2
Res. Carbon (Chip)	2.2k ohm 1/10W±5%	R264	134F222C	1
Res. Carbon (Chip)	6.8k ohm 1/10W±5%	R262	134F682C	1
Res. Carbon (Chip)	10k ohm 1/10W±5%	R253	134F103C	1
Res. Carbon (Chip)	22k ohm 1/10W±5%	R256, R260	134F223C	2
Res. Carbon (Chip)	130k ohm 1/10W±5%	R251	134F134C	1
Res. Carbon (Chip)	180k ohm 1/10W±5%	R272	134F184C	1
Res. Carbon (Chip)	270k ohm 1/10W±5%	R259	134F274C	1
Res. Carbon (Chip)	510k ohm 1/10W±5%	R252	134F514C	1

Sucher

28/34

	Description	Ref. No.	Parts No.	Q'ty
	Res. Carbon (Chip) 820k ohm 1/8W ±5%	R265	134H824C	1
	Res. Carbon (Chip) 1M ohm 1/10W±5%	R263	134F105C	1
	Res. Carbon (Chip) 1.2M ohm 1/10W±5%	R271	134F125C	1
	Res. Carbon (Chip) 2M ohm 1/8W ±5%	R267	134H205C	1
	Res. Carbon (Chip) 3.3M ohm 1/10W±5%	R268	134F335C	1
	Res. Potentiometer 220 ohm B	VR252	238N262C	1
	Res. Potentiometer 2k ohm B	VR253	238N265C	1
	Res. Potentiometer 20k ohm B	VR251	238N268C	1
	Res. Potentiometer 1M ohm B	VR254, VR255	238A482	2
	Transistor, 2SA1037	Q251	QSA1037T146P or QSA1037T146Q or QSA1037T146R	1
	Transistor, 2SD1767	Q252	QSD1767T100Q or QSD1767T100R	1
	CRT		1833113	1
	Socket, CRT		5700047	1
	Mask, CRT		0VM300049	1
	Holder, CRT		0VM400101	1
	Rubber, CRT Holder		0VM400100	1
	Deflection Yoke	L254	112N201	1
	Connector, Base 3P	CN53	5700127	1
	Connector, Base 4P	CN52	1770488	1
	Connector, Base 6P	CN51	1770490	1
	F.B. Trans	T251	1813320	1
	Surmister 20 ohm	R273	ARTD2FEL200S	1

VKR2302
FC-1E (CHARGER)

765...

1/34

Description	Ref. No.	Parts No.	Q'ty
Battery Charger Unit 7650765		1813499	1
Top, AC Adapter 7654767	A-51	OVM300214	1
Bottom, AC Adapter 7654775	A-52	OVM300215	1
Heat Sink, AC	B2-51	OVM400632	1
Holder, Heat Sink	B2-51	OVM400633	1
AC Barrier	B2-53	OVM300219	1
Shield Case (A), AC	B2-54	OVM300220	1
Shield Case (B), AC	B2-55	OVM300221	1
Screw, B-tight, Pan Head	L-51	GPKB9012	4
Screw, Bind Head	L-52	SBM32060	3
Screw, Flat Head	L-53	DDI79100	1
Charger PCB Ass'y		Not available	
Charger PCB 7654783		BC1551F01001	1/4
Cap. Ceramic 2200 pF/400VAC	C103, C104, C105	122Z011 or 122Z649	3
Cap. Ceramic 0.022μF/ V +80/-20%	C207	1220843	1
Cap. Electrolytic 1μF/50V ±20%	C204	126F105	1
Cap. Electrolytic 2.2μF/50V ±20%	C205	126F225	1
Cap. Electrolytic 22μF/35V ±20%	C109	126E226	1
Cap. Electrolytic 47μF/6.3V±20%	C208	126A476	1
Cap. Electrolytic 47μF/400V±20%	C106	122Z651	1
Cap. Electrolytic 100μF/35V ±20%	C108	126E107	1
Cap. Electrolytic 470μF/16V ±20%	C203	UVX1C471MPA1[illegible]	1
Cap. Electrolytic 820μF/16V ±20%	C202	122Z652	1
Cap. Polyester Film 0.0022μF/100V±10%	C201	1255222	1
Cap. Polyester Film 0.01μF/50V ±5 %	C206, C209	1254103	2
Cap. Polyester Film 0.022μF/50V ±5 %	C110	1254223	1
Cap. Across the Line 0.033μF/250V±20%	C102	122Z648	1
Cap. Across the Line 0.22μF/250V±20%	C101	122Z647	1
Cap. Metal Film 0.01μF/630V±10%	C107	122Z650	1
Coil, Choke 10μH	L201	LLBD***SF001	1
Diode, Rectifire, S1WB60	D101	AS1WB60*****	1
Diode, ERA22-10	D102	AERA2210****	1
Diode, ESAB-92M-02 or SB50-09J	D201	AESAB92M02** or ASB5009J****	1
Diode, ERB81-004	D207	AERB81004***	1
Diode, 1SS146	D105	A1SS146T77**	1
Diode, 1SS254	D103, D106, D202, D203, D205, D206	A1SS254T77**	6
Diode, Zener, MTZ5.1A or RD5.1ESB1	D204	MTZ5.1A or D5.1ESB1T	1

Description	Ref. No.	Parts No.	Q'ty
Diode, Zener, MTZ20A or RD20ESB1	D104	MTZ20A or D20ESB1	1
Filter, Line 33mH/0.3A	L101	1813569	1
IC, μPC358C or BA10358 765 5939	IC201	14LV512 or 14LF477	1
IC, AN78L05 or NJM78L05	IC202	AN78L05	1
Hybrid IC, KS-80 765 5947	HIC201	1813533	1
Res. Carbon 68 ohm 1/5W ± 5%	R218	1324680	1
Res. Carbon 82 ohm 1/5W ± 5%	R108	1324820	1
Res. Carbon 100 ohm 1/5W ± 5%	R204	1324101	1
Res. Carbon 150 ohm 1/2W ± 5%	R219	1330967	1
Res. Carbon 390 ohm 1/5W ± 5%	R107	1324391	1
Res. Carbon 560 ohm 1/5W ± 5%	R214	1324561	1
Res. Carbon 1.8k ohm 1/5W ± 5%	R222	1324182	1
Res. Carbon 1k ohm 1/5W ± 2%	R210	1354102	1
Res. Carbon 1k ohm 1/5W ± 5%	R212, R217, R220	1324102	3
Res. Carbon 2.2k ohm 1/5W ± 5%	R202, R215	1324222	2
Res. Carbon 4.3k ohm 1/5W ± 2%	R209	1354432	1
Res. Carbon 4.7k ohm 1/5W ± 5%	R205, R206, R211	1324472	3
Res. Carbon 9.1k ohm 1/5W ± 2%	R208	1354912	1
Res. Carbon 10k ohm 1/5W ± 5%	R221	1324103	1
Res. Carbon 12k ohm 1/5W ± 5%	R213	1324123	1
Res. Carbon 100k ohm 1/5W ± 5%	R103, R104, R105, R203, R207	1324104	5
Res. Carbon 330k ohm 1/2W ± 5%	R101	1330968	1
Res. Oxide Metal Film 3.3 ohm 2W ± 5%	R102	1330460	1
Res. Oxide Metal Film [illegible]	[illegible]	[illegible]	1
Res. Oxide Metal Film 47k ohm 2W ± 5%	R106	1330963	1
Res. Metal Film 0.1 ohm 1W ± 5%	R201	1330966	1
Res. Metal Film 0.47 ohm 1W ± 5%	R109	1330965	1
Res. Semi-fixed 1k ohm (B)	VR201	138J777	1
Res. Semi-fixed 5k ohm (B)	VR202	138J780	1
Transistor, 2SB1140S or 2SB1140T	Q201	Q2SB1140S××× or Q2SB1140T×××	1
Transistor, 2SD1207S or 2SD1270T	Q202	Q2SD1207S××× or Q2SD1207T×××	1
FET 2SK952	Q101	Q2SK952×××××	1
Digital Transistor, DTC114ES	QR201, QR202, QR203	C114ES	3

765...

21/34

Description	Ref. No.	Parts No.	Q'ty
AC Cord (with Stopper)		WAE0182KD001	1
Fuse 250V TIA	F101	1790481	1
Holder, Fuse		1790424	1
DC Jack 7654791	JK201	1631083	1
Connector Base 2P	CN201	1740454	1
Switching Transformer	T101	LTT**EPMS001	1
Photo Cuplar PC-111 7654809	PH201	1813254	1
LED SLR40VR3F	LED201, LED202	ESLR40VR3F**	2
Primary Control PCB 7654817		BC1151F01002	1/5
Cap. Ceramic (Chip) 390 pF/50V ±5 % SL	C154	1270331C	1
Cap. Ceramic (Chip) 0.0022μF/50V ±10%	C151	12B3222C	1
Cap. Ceramic (Chip) 0.01μF/50V +80/-20%	C155	12F3103C	1
Cap. Ceramic (Chip) 0.1μF/50V +80/-20%	C152	12F3104C	1
Cap. Ceramic (Chip) 1μF/50V +80/-20%	C153	72F6105C	1
Diode, Zener (Chip) RD10M (B)	D152	ARD10MTIB***	1
Diode, Zener (Chip) RD24M (B)	D151	ARD24MTIB***	1
IC, M51977FP	IC151	GM51978FP***	1
Res. Carbon 33 ohm 1/10W ±5%	R156	134F330C	1
Res. Carbon 68 ohm 1/10W ±5%	R157	134F680C	1
Res. Carbon 12k ohm 1/10W ±5%	R152	134F123C	1
Res. Carbon 18k ohm 1/10W ±5%	R155	134F183C	1
Res. Carbon 22k ohm 1/10W ±5%	R153, R154	134F223C	2
Res. Carbon 100k ohm 1/10W ±5%	R151	134F104C	1
Charger SW PCB 765 4825		BC1551F01003	1
Switch, Micro AH1462	SW201	1624214	1
Wire, Jamper.	CL201	WX1C1551001	1

VKR2302
C1551EA ①

C1000B6 DECK PARTS LIST → 765.....

32/34

Ref. No.	Description		Parts No.	Q'ty
1	Chassis Ass'y (Consists of 2-96)	765 4411	6A50978	1
97	Stopper Ass'y	4429	6A50984	1
106	Base, Cylinder		6A50577	1
110	Sub Chassis, Right (See Exploded View Cabinet)		0VM300016	1
111	Sub Chassis, Left (See Exploded View Cabinet)		0VM300015	1
112	Shield Plate, Audio (See Exploded View Cabinet)		0VM400534	1
113	Guide Rail, TG		6N50268	1
114	LED PCB	4437	1614429	1/10
115	LED (Infrared)	4445	1401373	1
117	Post, Impedance		6T50036	1
118	Plate, Guide Rail		6N50168	1
120	Washer, Polyslider 0.4t		0VM400684	1
121	Flange, Impedance		6T50037	1
122	Sleeve, Impedance		6T50038	1
123	Roller, Impedance		6N50169	1
124	Flange, Impedance A		6T50120	1
125	Bracket, MTG		6N50170	1
126	Full Erase Head	765 4452	165M307	1
128	Spring, FE		6V50074	1
130	Washer, Cut 0.8t		0VM400427	1
131	Sensor, Dew	4460	1813497	1
133	Bracket, Photo Sensor	4478	6N50179	1
134	Photo Transistor	4486	TPS606	1
135	PCB, Photo Sensor	4494	1614430	1/10
136	Brush, Ground	4502	6A50782	1
141	Guide Stand		6S50516	1
146	Slide S	4510	6A50901	1
152	Guide Roller S	4528	6A50583	2
161	Slide T	4536	0VM300156	1
167	Spring Plate, Slide		6S50402	1
177	Pinch Lever	4544	6A50976	1
187	Cap, Pinch	4551	6N50202	1
188	Pinch Roller	4569	6A50606	1
190	Spring		6V50084	1
191	Spring, Pinch		6V50083	1
193	ACE Head	4577	165M306	1
194	Sleeve, TG		0VM400681	1
195	Spring, X ADJ		6V50106	1
196	Spring, ACE		6V50107	3
197	Bracket, Spring		6T50151	1
198	Tape Guide		6T50045	1
199	Flange, TG, Bottom		0VM400683	1
200	Bracket, ACE		6A50959	1
203	Loading Motor	4585	0VM400265	1
209	Flange, ACE, TG		6T50044	1
210	Belt, Square	4593	0VM400267	1
212	Loading Gear	4601	0VM400256	1
225	Brake Lever		6A50977	1
230	Cam Gear	4619	6N50204	1
231	Switch, Mode Select	4627	1620384	1
232	Lever Sub Ass'y		6A50727	1
240	Cut Washer, Φ1.6		6P50147	3

765...

33/34

Ref. No.	Description	Parts No.	Q'ty
242	Lever Ass'y 765 4635	0VM400548	1
245	Spring, SPL	0VM400334	1
246	Bracket, Head	6A50965	1
254	Cam Lever	6A50611	1
257	Lever, BT 765 4643	6A50585	1
273	S Reel Disk 〃 4650	6A50590	1
289	Reel, S Band 〃 4668	6A50593	1
294	Gear 7655756	6N50206	1
295	Boss, Cassette	6N50207	2
298	Washer, Polyslider, 0.25t	6P50156	3
299	Washer, Polyslider, 0.13t (for Adjustment)	6P50157	1
305	Tu Clutch 4676	6A50765	1
318	Cut Washer, Φ1.2	6P50178	6
321	C Pulley 765 4684	6A50886	1
345	Belt 〃 4692	6L50080	1
347	Capstan Motor 〃 4700	1640334 or	1
	???	1640393	
350	Cover, PG	6S50455	1
353	Cylinder Ass'y 4718	0VM300034	1
	(Consists of 354-375)		
354	Screw, Small, Pan Head M1.6 X 5	MZNJG050	2
355	Washer	WPN7043	2
356	Drum, Upper 4726	0VM300032	1
414	Dumper	6A50620	1
417	REV B Lever 4734	6A50773	1
443	Brake Lever Ass'y S 4742	0VM400543	1
449	Cassette Holder Ass'y 4759	6A50908	1
L1-011	Screw, Small, Pan Head M1.6 X 1.6	MPNEG016	1
L1-021	Screw, Small, Pan Head M1.6 X 1.8	MPNEG018	1
L1-031	Order Screw, ACE	6T50156	2
L1-041	Screw, Small, Pan Head M1.6 X 3	MPKJG030 or	8
	(See Exploded View Cabinet)		
L1-042	Screw, Small, Pan Head M1.6 X 3	MPNEG030	3
	(See Exploded View Cabinet)		
L1-043	Screw, Small, Pan Head M1.6 X 3	MPKJG030	1
L1-044	Screw, Small, Pan Head M1.6 X 3	MPKJG030	1
L1-045	Screw, Small, Pan Head M1.6 X 3	MPKJG030	2
L1-046	Screw, Small, Pan Head M1.6 X 3	MPKJG030	2
L1-047	Screw, Small, Pan Head M1.6 X 3	MPKJG030	2
L1-051	Screw, Small, Pan Head M1.6 X 3	MPNEG030	2
L1-061	Screw, Small, Pan Head M2 X 5 (See Exploded View Cabinet)	MPKJ2050	1
L1-062	Screw, Small, Pan Head M2 X 5 (See Exploded View Cabinet)	MPKJ2050	2
L1-063	Screw, Small, Pan Head M2 X 5 (See Exploded View Cabinet)	MPKJ2050	1
L1-064	Screw, Small, Pan Head M2 X 5 (See Exploded View Cabinet)	MPKJ2050	2
L1-065	Screw, Small, Pan Head M2 X 5 (See Exploded View Cabinet)	MPKJ2050	2
L1-071	Screw, Small, Pan Head M1.6 X 3.5	MPKJG035	3
L1-072	Screw, Small, Pan Head M1.6 X 3.5	MPKJG035	1
L1-073	Screw, Small, Pan Head M1.6 X 3.5	MPKJG035	2
L1-081	Screw, Small, Pan Head M1.6 X 5.5	MPKJG055	1
L1-082	Screw, Small, Pan Head M1.6 X 5.5	MPKJG055	2
L1-091	Screw, Small, Pan Head M1.6 X 6.3	MPNEG063	3
L1-101	Screw, Small, Pan Head M1.6 X 7	MPKJG070	1

34/34

Ref. No.	Description	Parts No.	Q'ty
L1-111	Screw, Special, Pan Head M1.2 X 3.3	6L50065	1
L1-112	Screw, Special, Pan Head M1.2 X 3.3	6L50065	1
L1-121	Screw, Special M1.6 X 3.5	6L50076	3
L1-131	Nut, Hexagon M2	NHN3020	1
L1-141	Nut, Hexagon, Special M2	6L50066	1
L1-151	Nut, Hexagon M2.6	NHMN026	1
L1-161	E-ring Φ2.3	EEN0023 or EEU0023	1
L1-171	Screw, Small, Pan Head M1.6 X 2.5	MPKJG025	1
L1-181	Order Screw, ACE	6T50149	1
L1-191	Cap Bolt M2 X 3.5	6T50157	1
L1-201	Screw, Small, Pan Head M1.6 X 12 (See Exploded View Cabinet)	MPKJG120	3
L1-221	Screw, Small, Pan Head M2 X 5 (See Exploded View Cabinet)	MPKG2050	1
L1-222	Screw, Small, Pan Head M2 X 5 (See Exploded View Cabinet)	MPKG2050	1
L1-223	Screw, Small, Pan Head M2 X 5 (See Exploded View Cabinet)	MPKG2050	3
L1-231	Screw, Small, Pan Head M2 X 2.8	MPNE2028	1
L1-241	Screw Tooth Φ2 (See Exploded View Cabinet)	WBN2055 or WBM2055	1

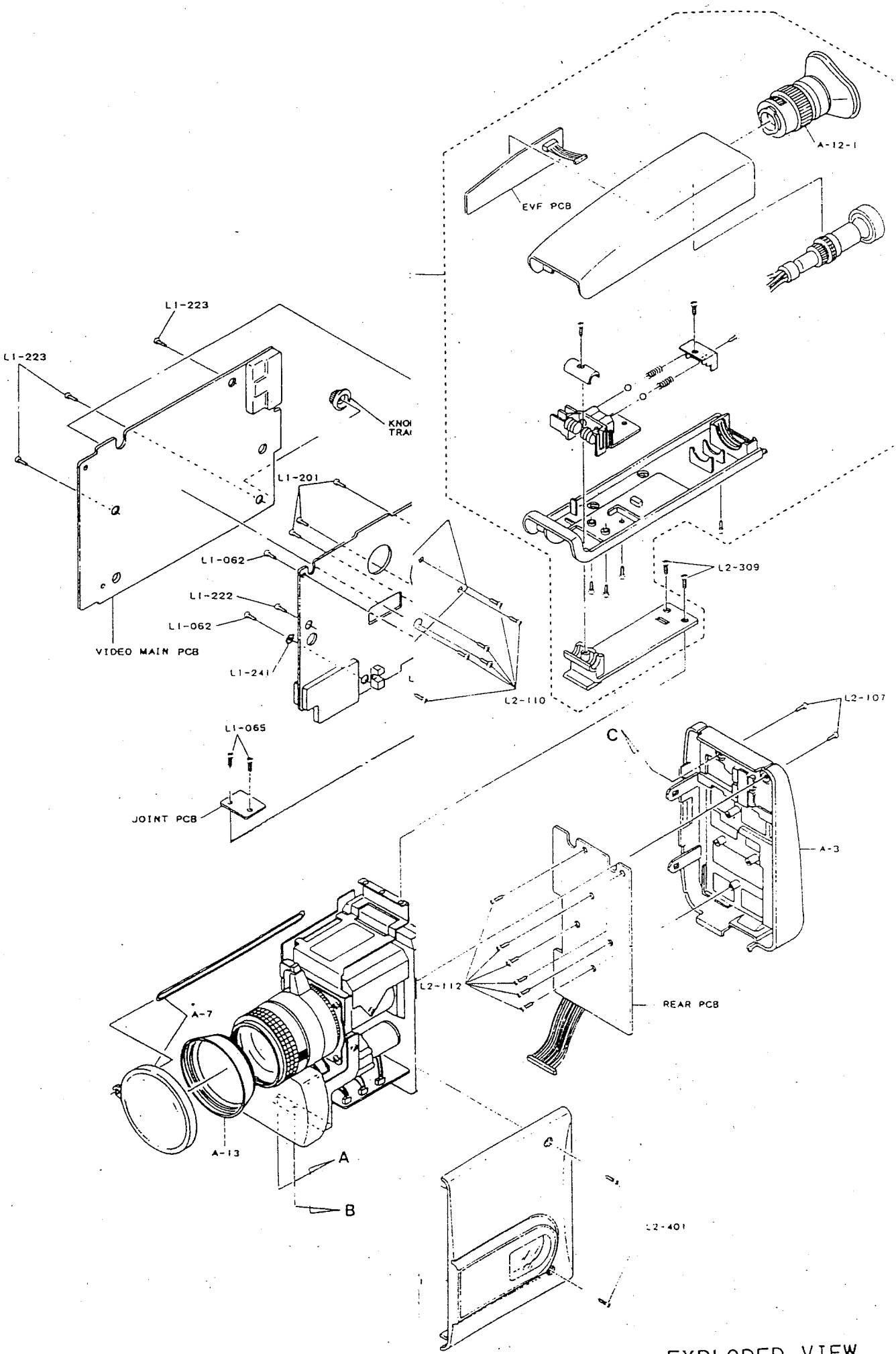

EXPLODED VIEW
(CABINET)

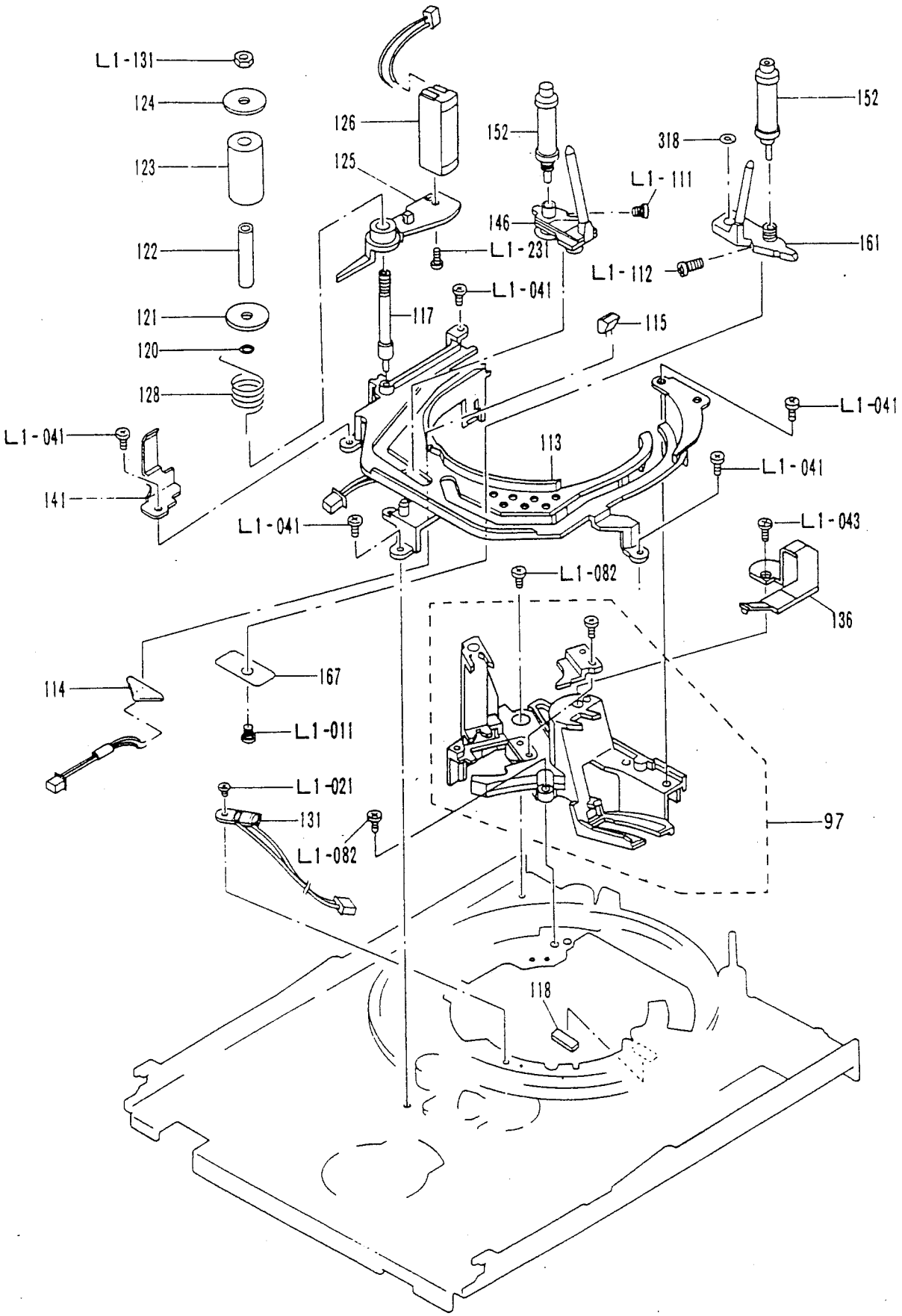

EXPLODED VIEW
(DECK 1/6)

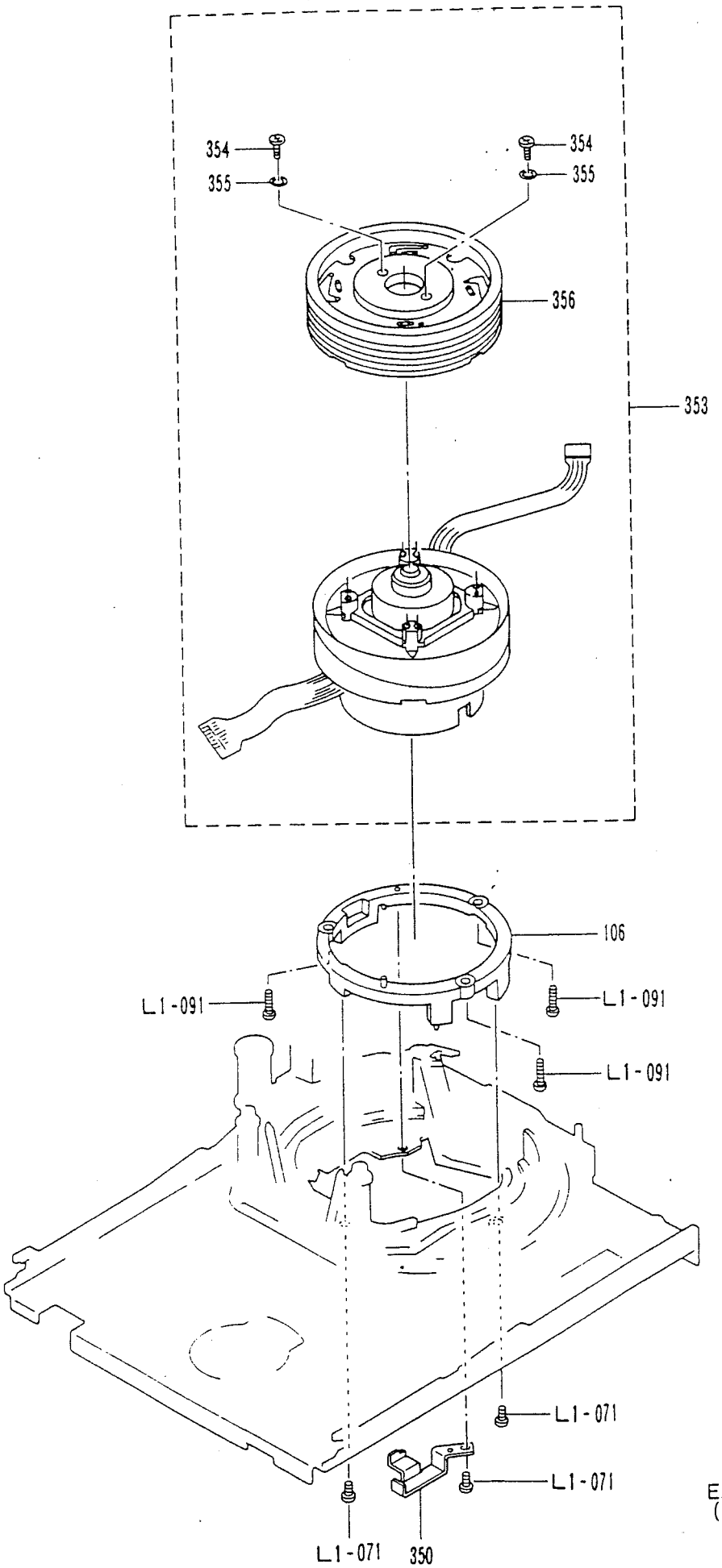

EXPLODED VIEW
(DECK 2/6)

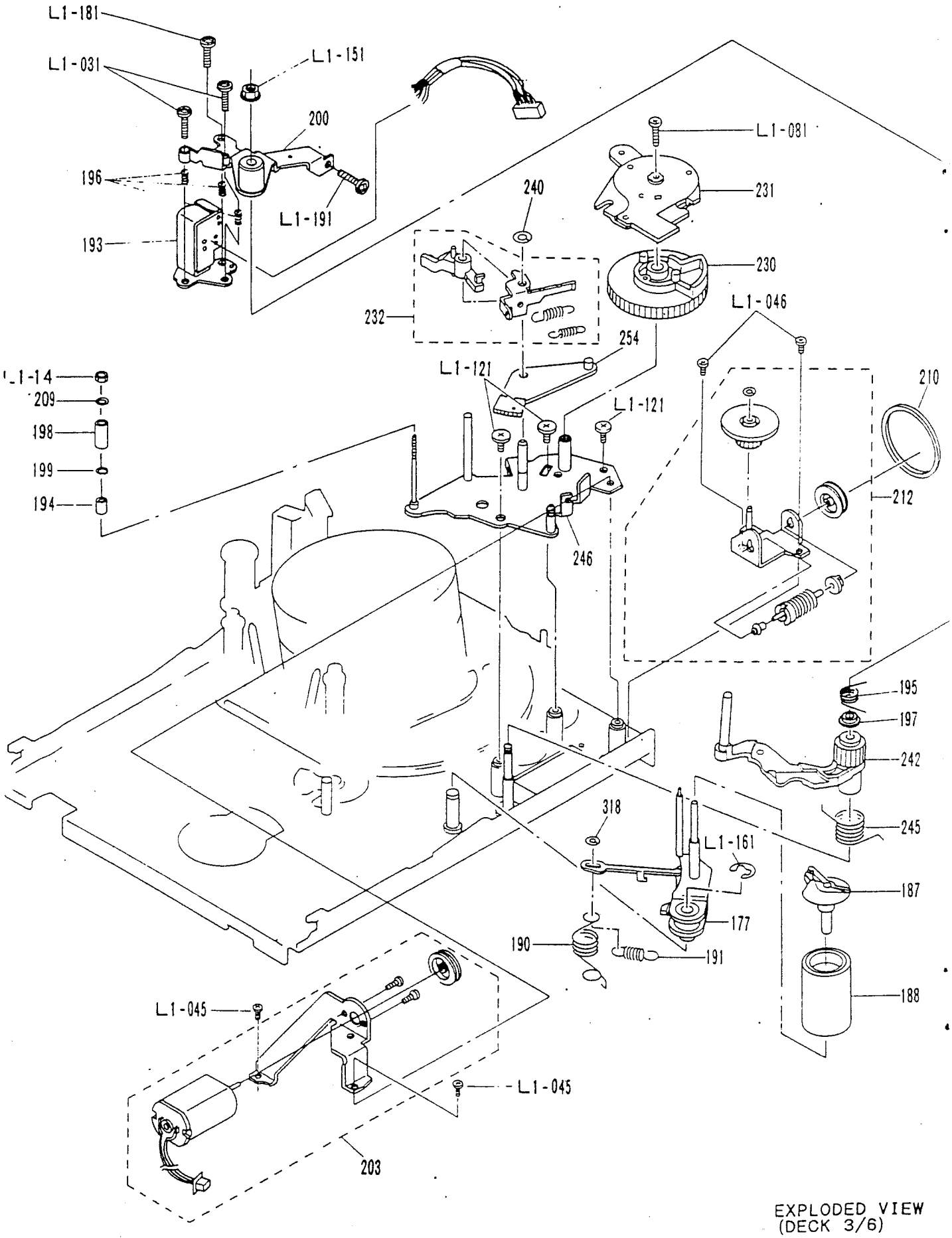

EXPLODED VIEW
(DECK 3/6)

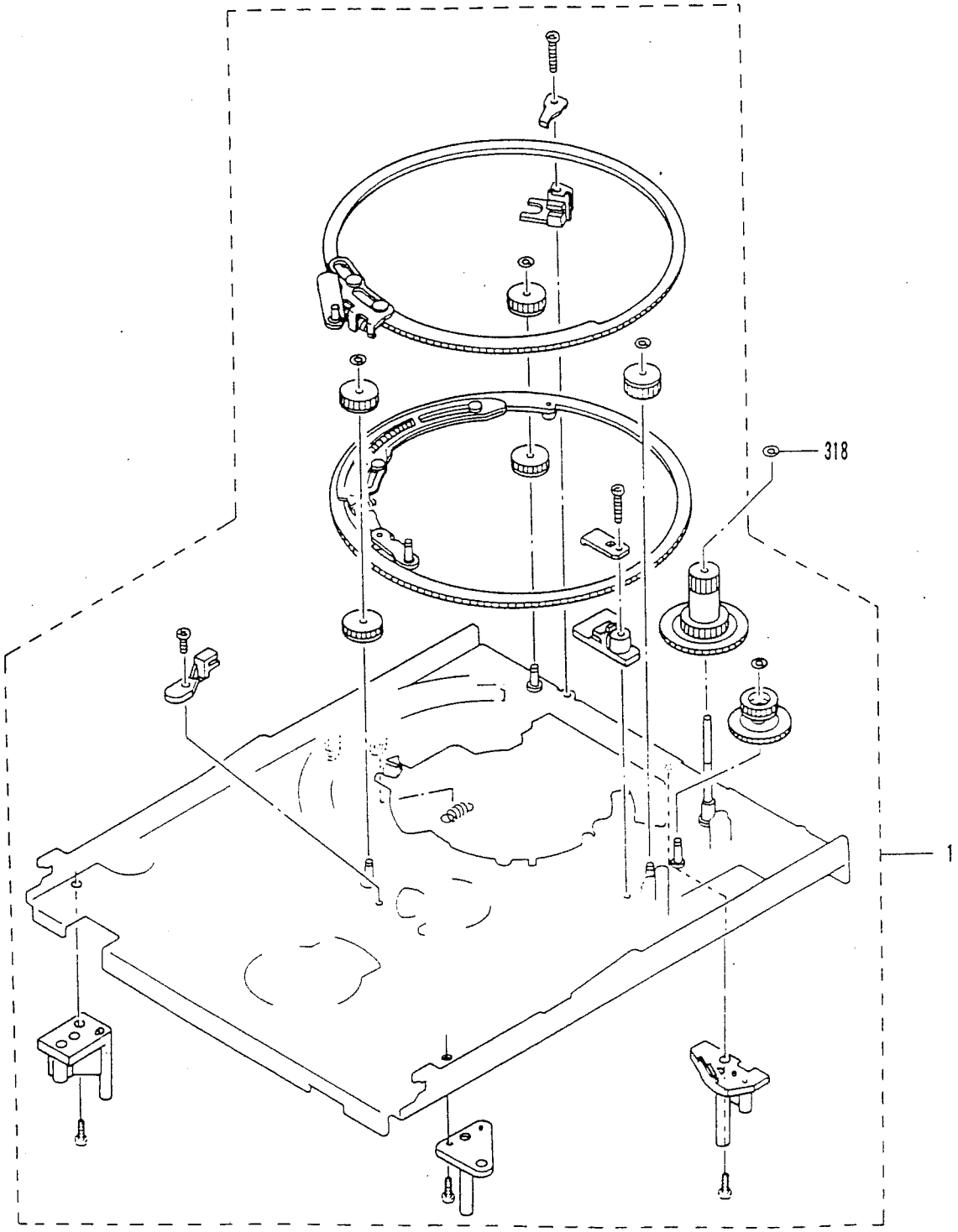

EXPLODED VIEW
(DECK 4/6)

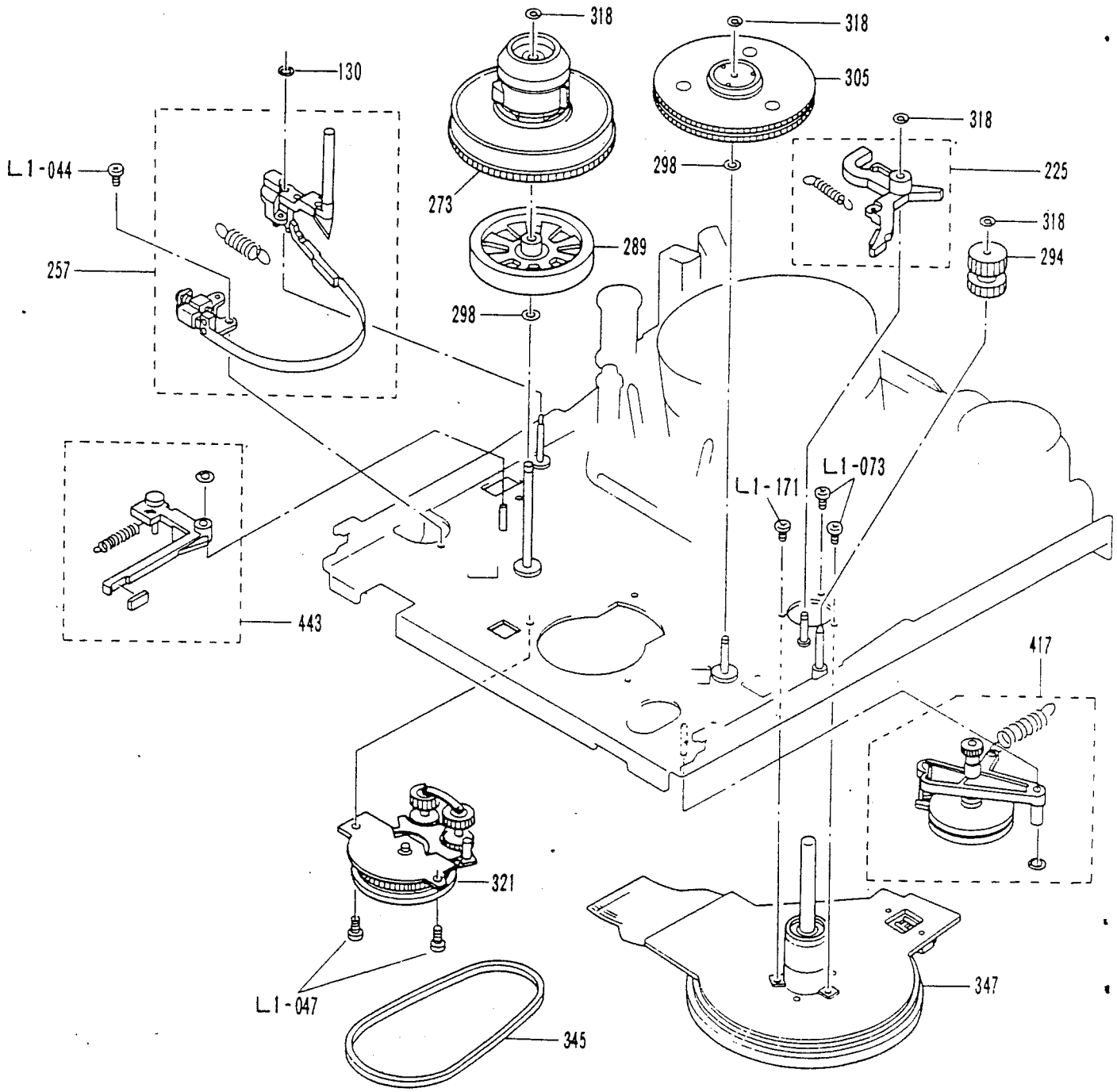

EXPLODED VIEW
(DECK 5/6)

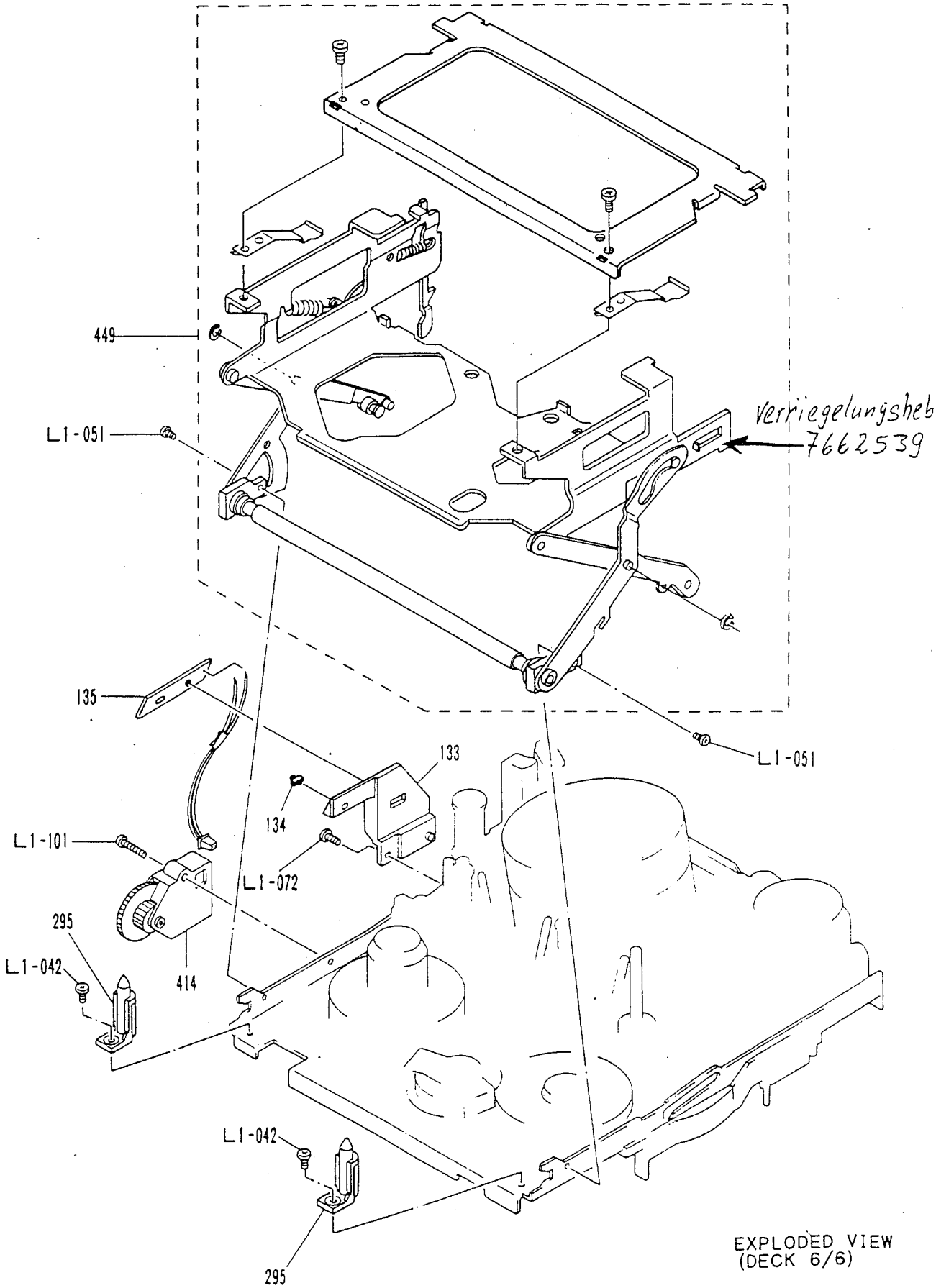

EXPLODED VIEW
(DECK 6/6)

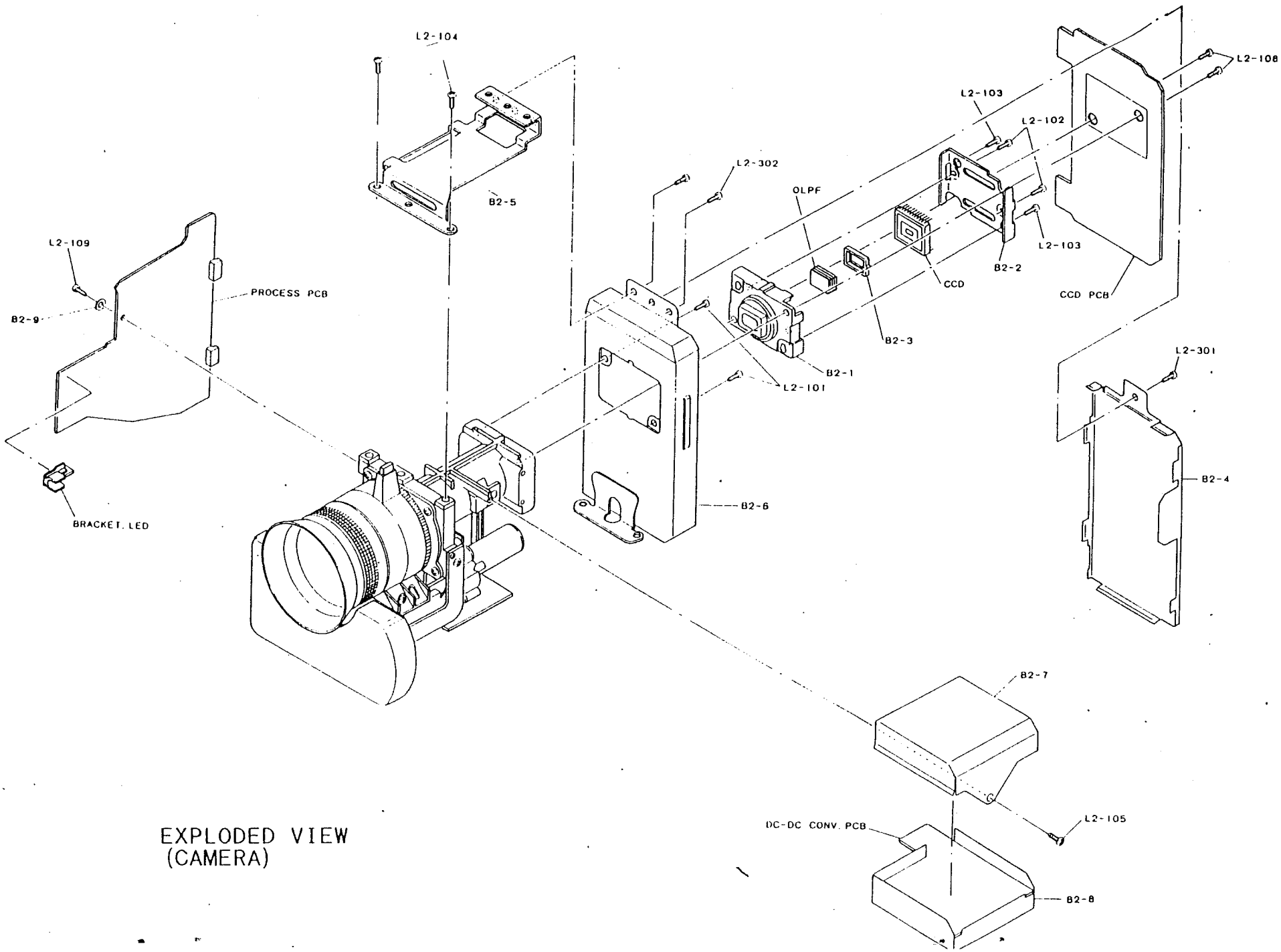

EXPLODED VIEW
(CAMERA)
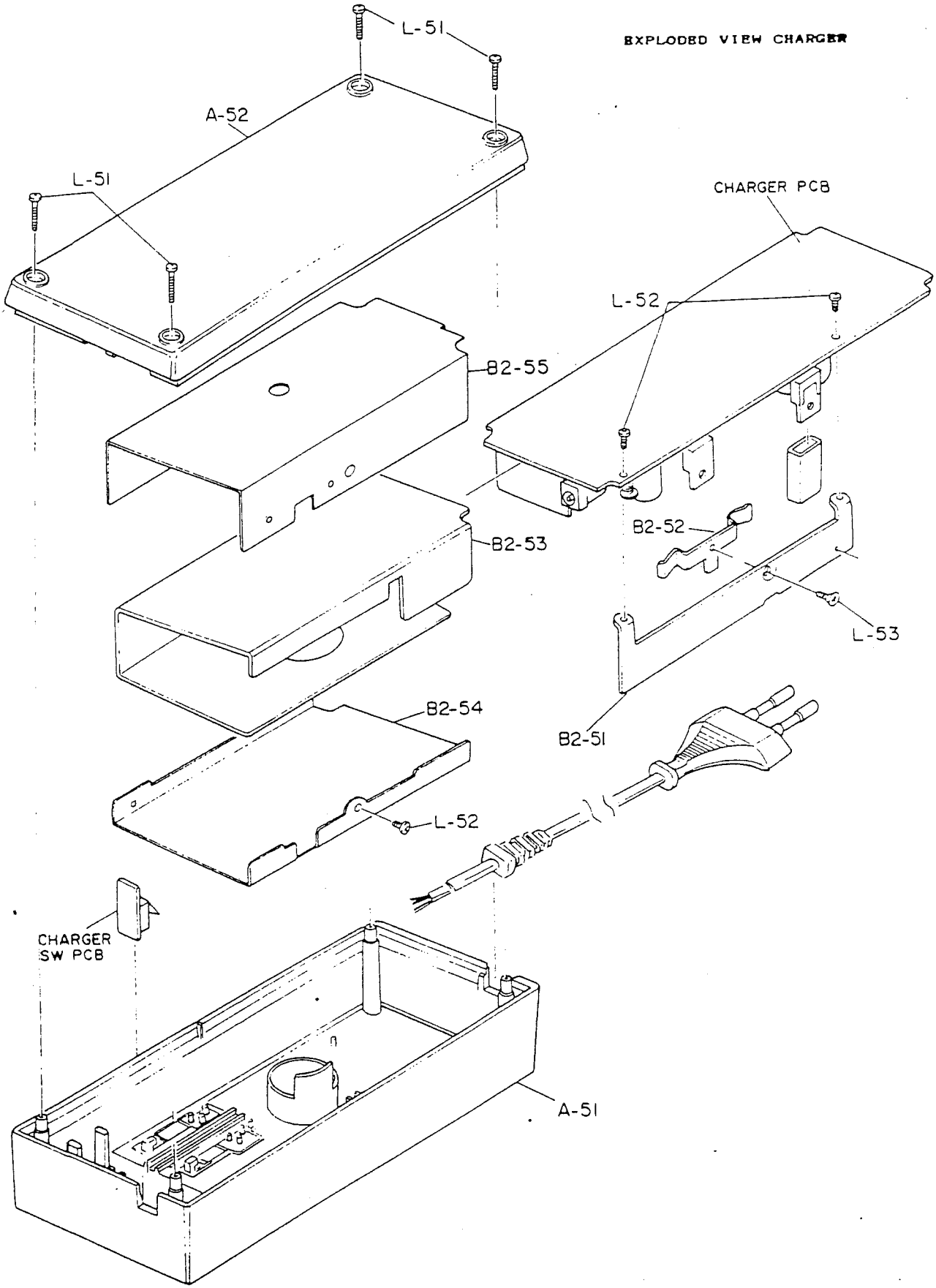
EXPLODED VIEW CHARGER